Advanced Multiphase Mixing

DR Rector, ML Stewart and TE Michener
Pacific Northwest National Laboratory

J Shultz
DOE-EM

Technical Exchange 2010
Atlanta, GA

Pacific Northwest
NATIONAL LABORATORY

Print

Close

Agenda

- Objective
- Description of the ParaFlow simulation capability
- Application to solid-liquid multiphase systems
- Conclusions

Multiphase Processing

- Many processes across the DOE complex involve the handling of solid-liquid suspensions and sediments
  - Jet pump tank mixing
  - Pulse jet mixing
  - Pipeline transport
  - Leaching ultrafiltration

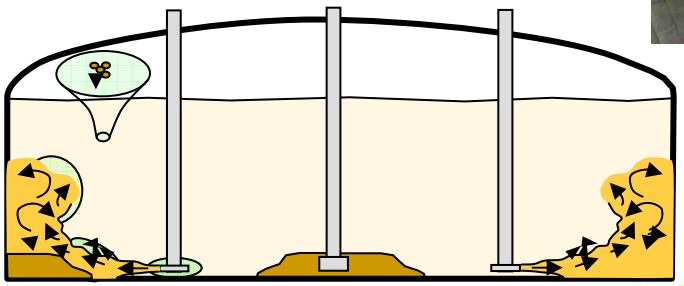

Pacific Northwest NATIONAL LABORATORY

Multiphase Processing

- Designers and operators need information on the performance of these systems
  - Rate of sediment resuspension (based on sediment properties and operating conditions)
  - Maximum extent of sediment resuspension
  - Possibility of system plugging or fouling
  - Optimization of system design
  - Optimization of system operation

- Current modeling or simulation approaches typically require simplifying assumptions that limit their accuracy

- Objective of this work is a simulation capability accurately predicts multiphase system behavior

Approach

- Develop a general multiphase flow simulation capability (ParaFlow) that effectively uses highly parallel computational resources
  - Based on the lattice kinetics method developed at PNNL
  - Incorporate appropriate physical models
  - Validate using available data

- The increased computational power from parallelization is used to include more physically realistic models
  - Sediment layer model
  - Detailed geometry
  - Rotating jet model

Solid-Liquid Systems

- Solid-liquid multiphase processes are coupled systems, where the flow, suspended and settled solids interact in different ways.

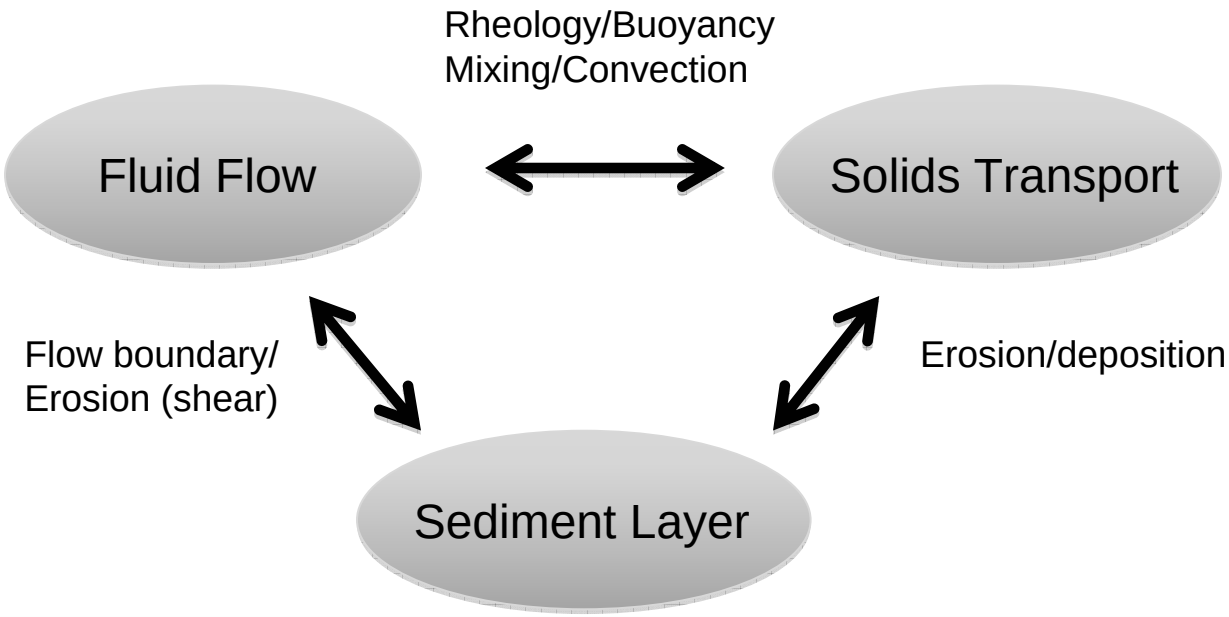

Sediment Layer Model

- Sediment surface represented using level set distance parameter
- Surface evolution by erosion/deposition
  - Deposition by hindered settling
  - Erosion occurs when surface shear stress exceeds specified yield stress

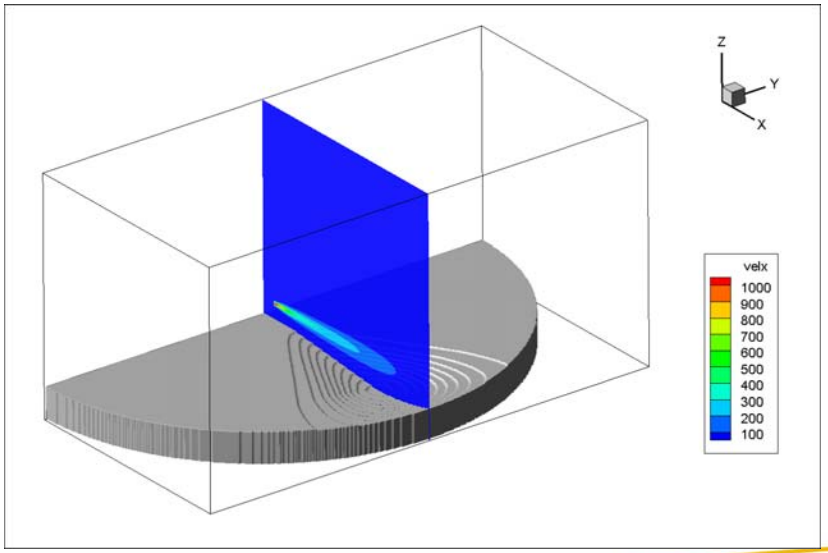

Pipe Plugging

- Series of tests performed in support of WTP
- Determine critical velocity for a variety of suspensions
  - Particle sizes: nominal 10-100 μm
  - Solid densities: ~2-10 g/cc
  - Newtonian and non-Newtonian carrier fluids

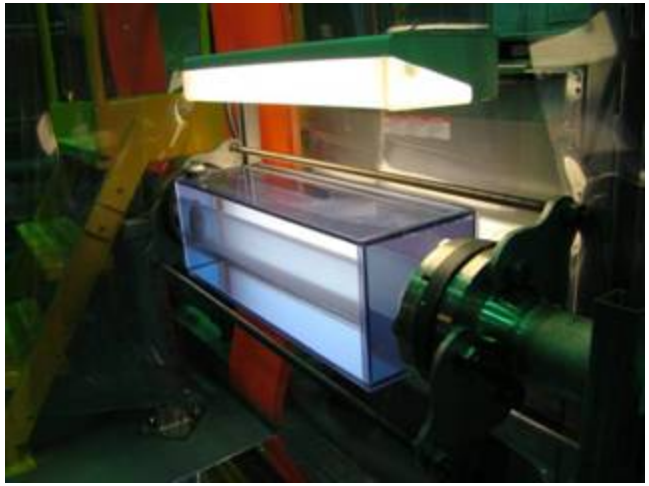

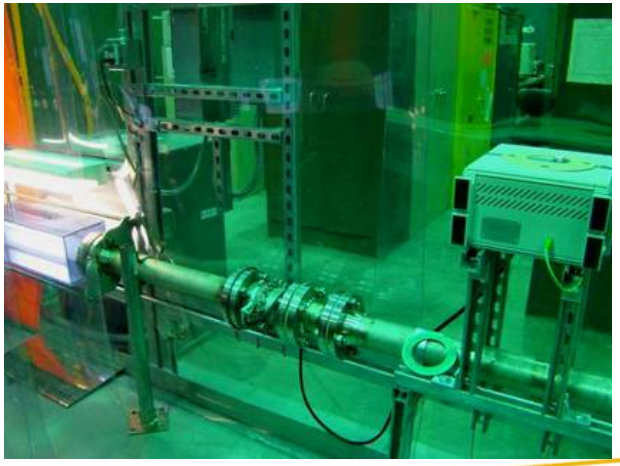

Pipeline Plugging

- Technical Challenge
  - Optimize solids loading
  - Reduce risk of plugging
  - Cohesive solids, Non-Newtonian

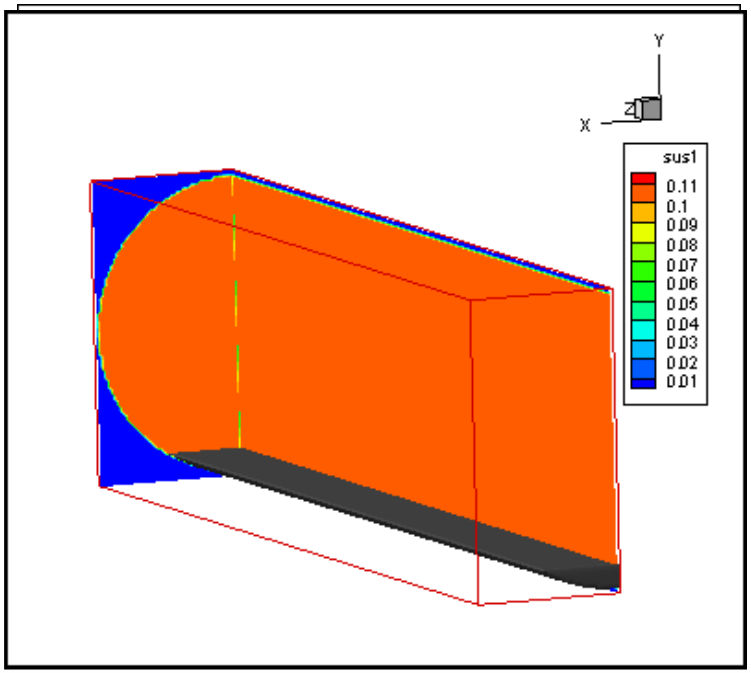

Click On Image Above To Play Animation

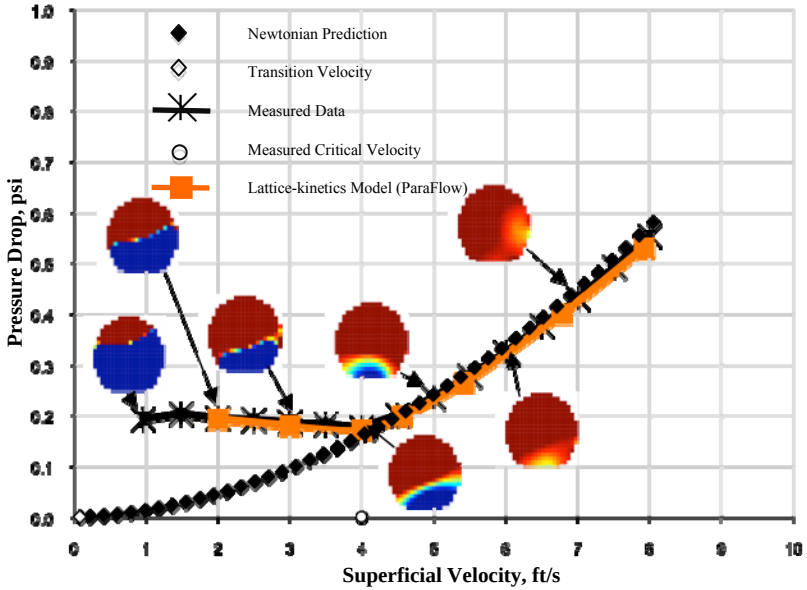

Pacific Northwest NATIONAL LABORATORY

Print

Close

Sediment Layer Model

- Dynamic lithostatic model
  - Shear and compressive stresses
  - Where yield stress is exceeded, the sediment will flow until yield stress equilibrium is reached

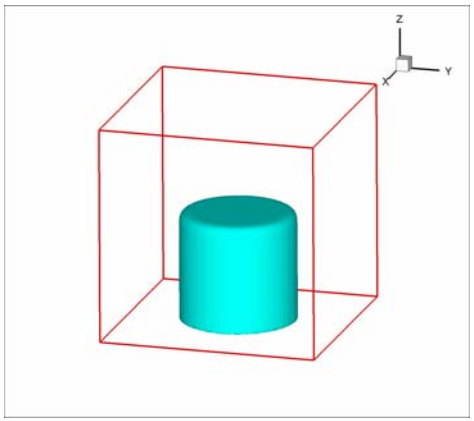

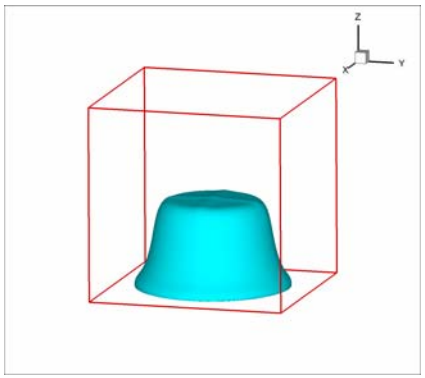

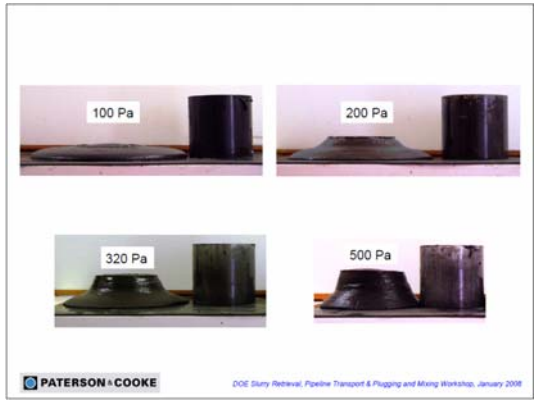

Detailed Geometry - Ultrafiltration

- Modeling on two scales
  - Pore scale model
    - Resolves detailed pore geometry
    - Models discreet particle transport and deposition
    - Information used to create constitutive expressions for use in the device scale model
  - Device scale model
    - Calculates flow and solid distributions a function of time
    - Suspended and deposited solids modeled as continuum fields

Pore Scale/Device Scale Results

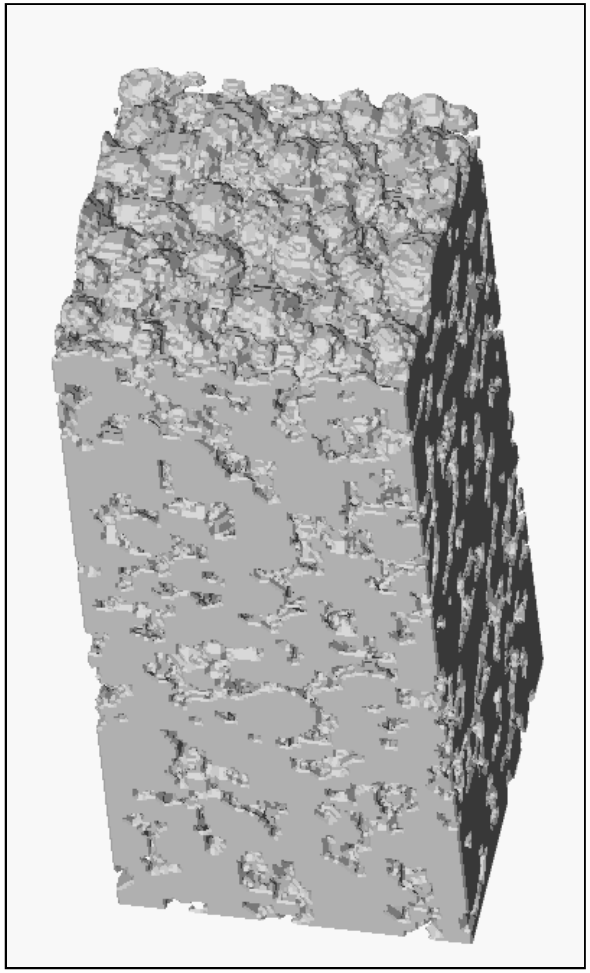

Click On Image Above To Play Animation

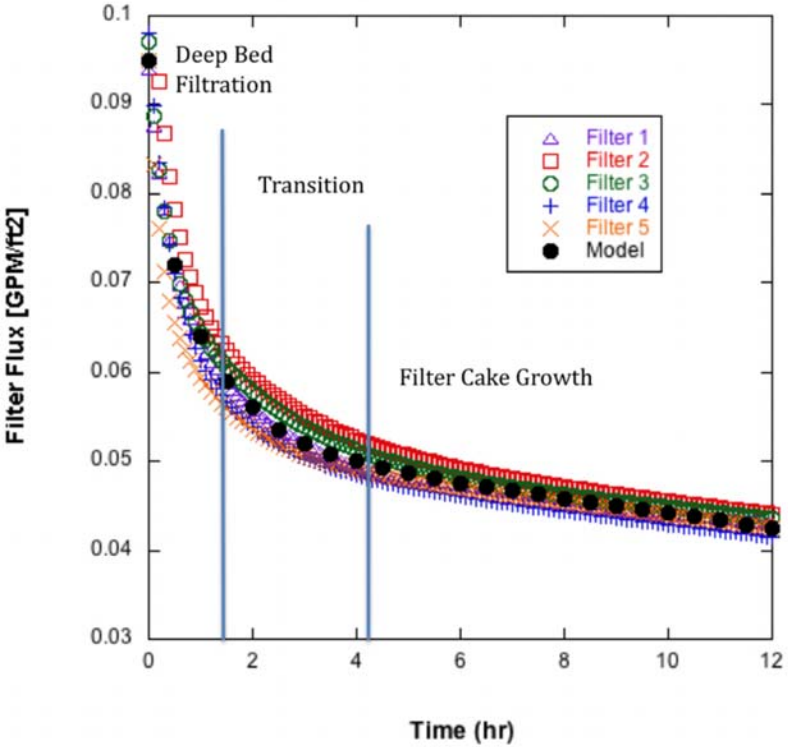

Pacific Northwest
NATIONAL LABORATORY

Print

Close

Rotating Jet Model

- Current methods involve step change in jet direction
- Time required for jet development and attaching to floor to form wall jet
- Rotating jet model involves two interacting grids
  - Rotating grid centered on the jet pump
  - Stationary grid to represent the rest of the tank

Waste Feed Delivery

- Sufficiently mix and sample HLW sludge batches to provide accurate characterization allowing WTP feed certification and consistent HLW batch delivery
- A series of scaled mixing tank have been built and are currently being tested for (43.2” and 120” diameters)
- Velocity data for stationary jets in different orientations will be used for code calibration
- Simulation results shown here are for the 120” diameter tank

Waste Feed Delivery Geometry

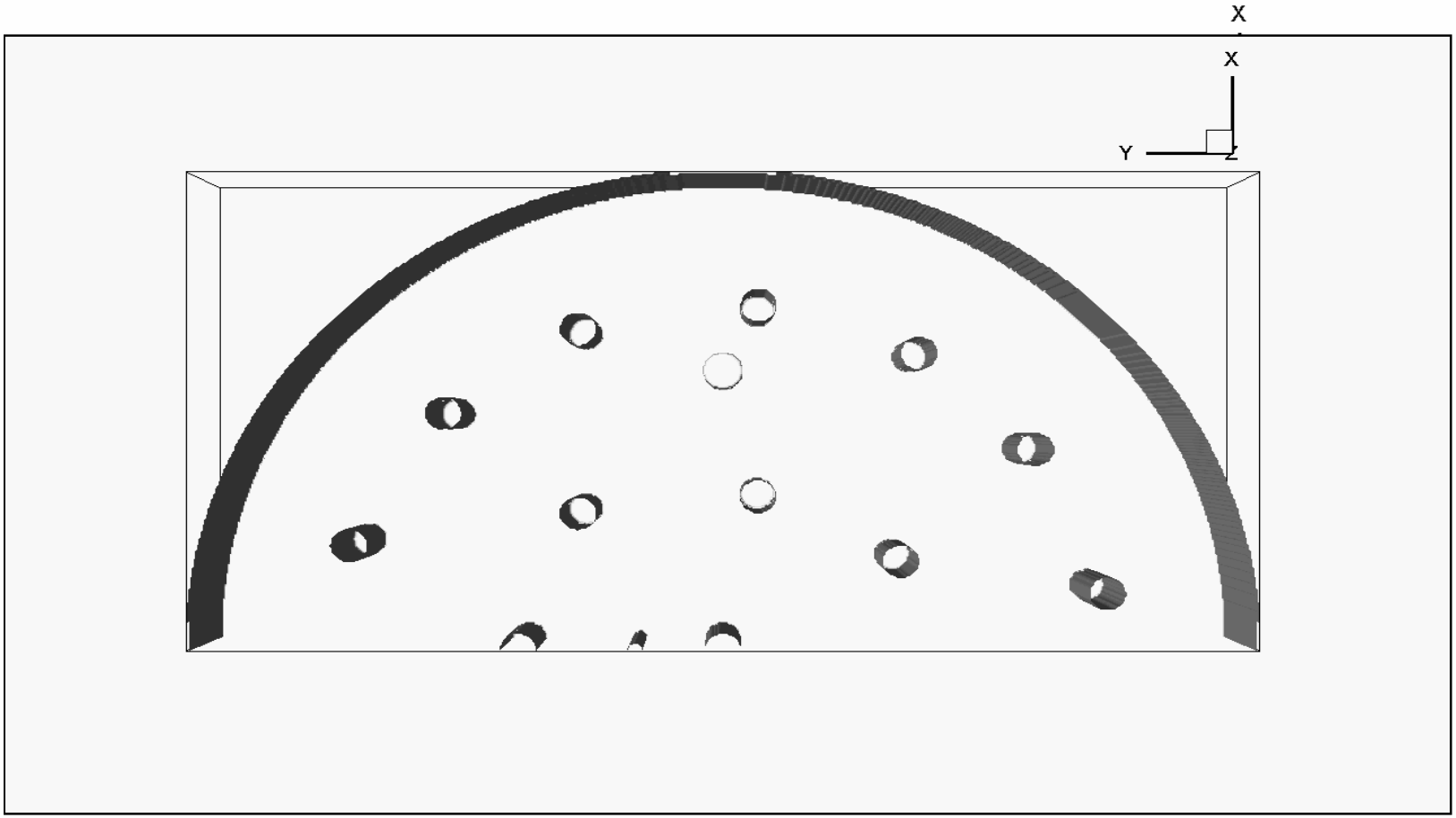

Click On Image Above To Play Animation

Pacific Northwest
NATIONAL LABORATORY

Print

Close

Velocity Magnitude

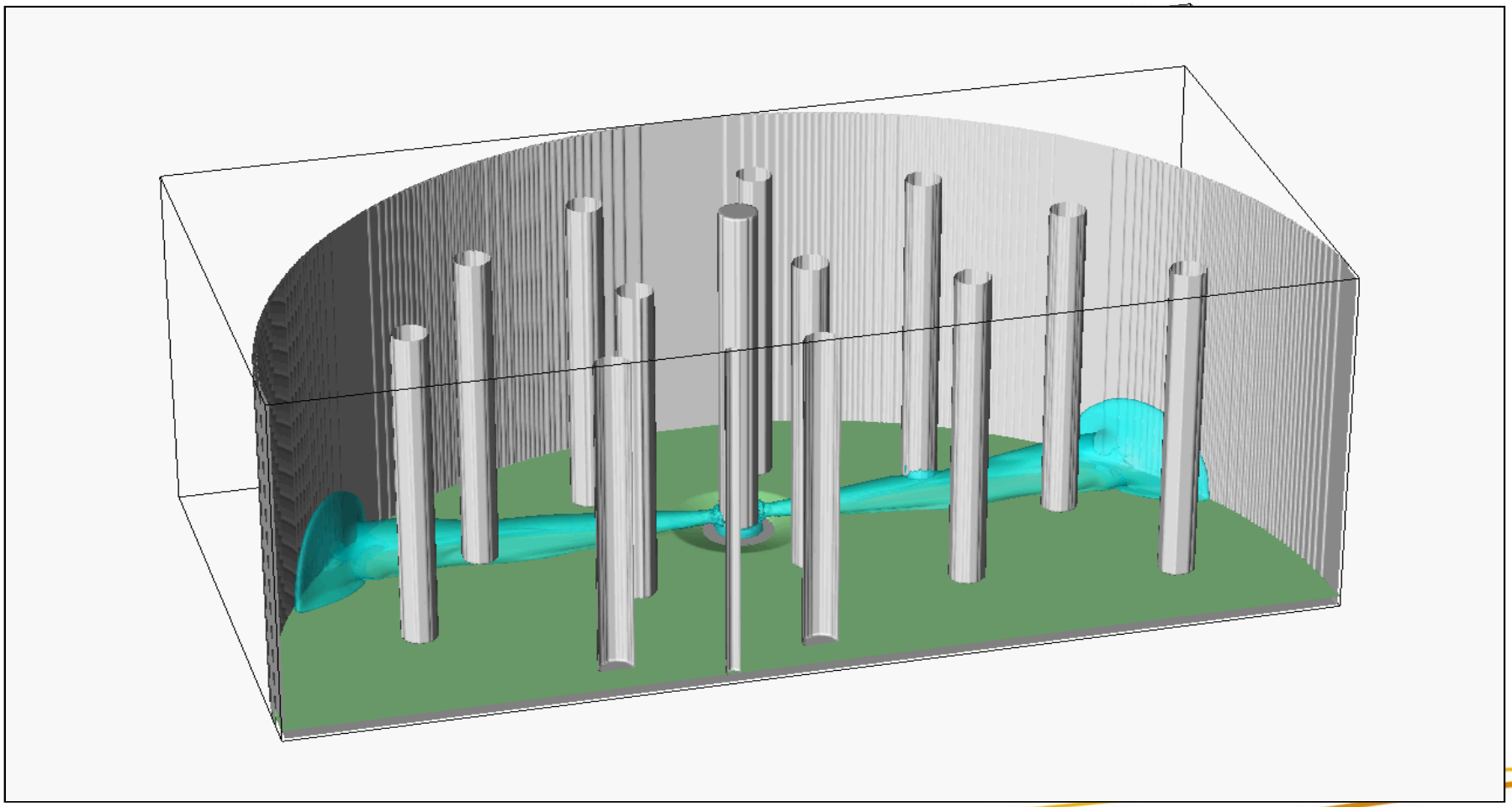

Click On Image Above To Play Animation

Pacific Northwest
NATIONAL LABORATORY

Print

Close

Suspended Solids Concentration

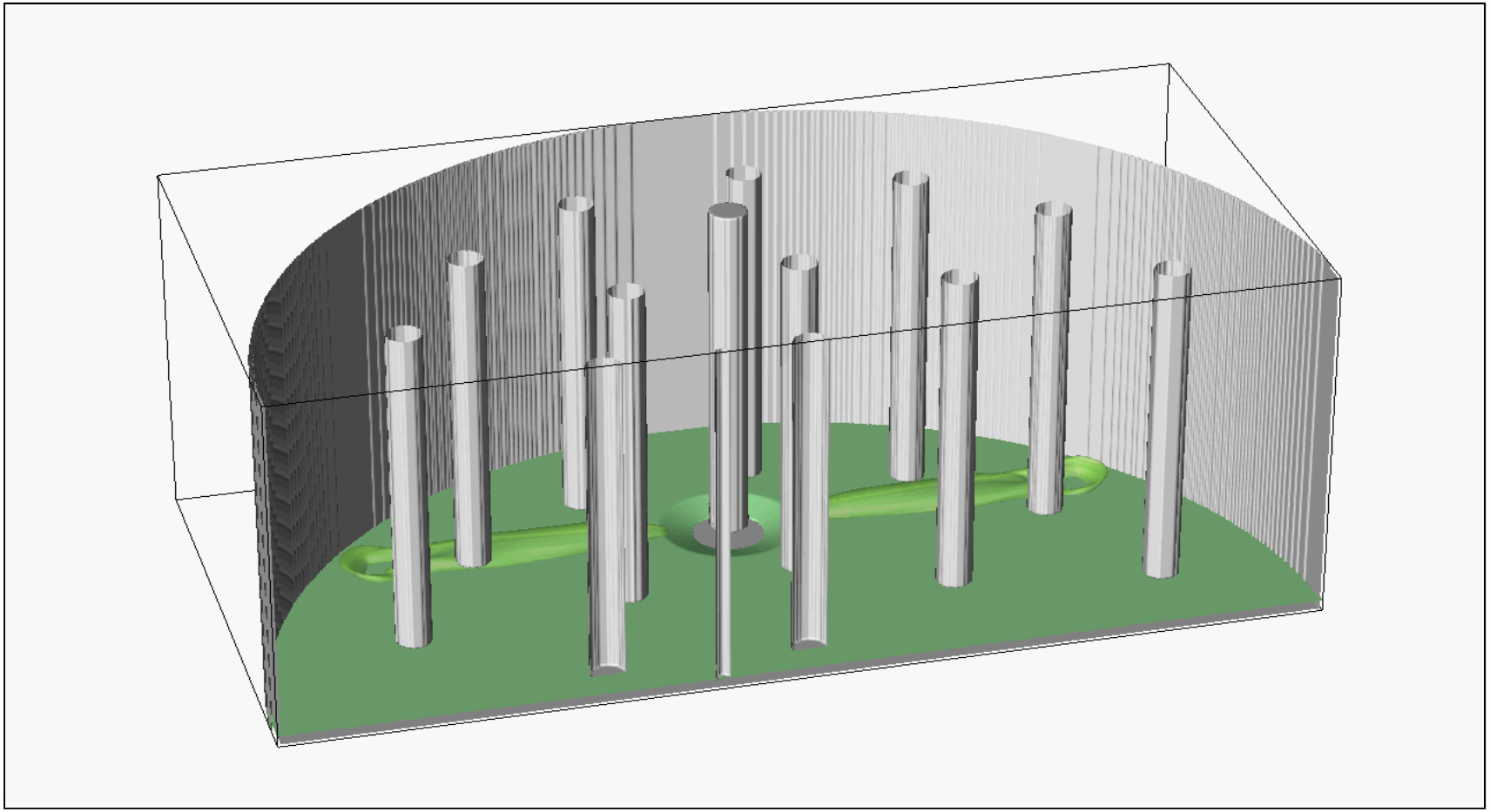

Click On Image Above To Play Animation

Pacific Northwest
NATIONAL LABORATORY

Print

Close

Current Activities

- Jet Pump Tank Mixing
  - Calibration using velocity and concentration data from WFD Tank Mixing tests
  - Calibration using SRNL tank mixing data
  - Mixing with low tank volumes
- Work to begin on pulse jet simulation

Conclusions

- A simulation capability has been developed which takes advantage of parallelism to include detailed models that improve accuracy
- Demonstrated this capability through a series of applications (including pipe transport and ultrafiltration)
- Currently evaluating the method for tank jet pump applications using scaled test data

QUESTIONS?

Pacific Northwest
NATIONAL LABORATORY

Print

Close

Full Tank - Solids Concentration

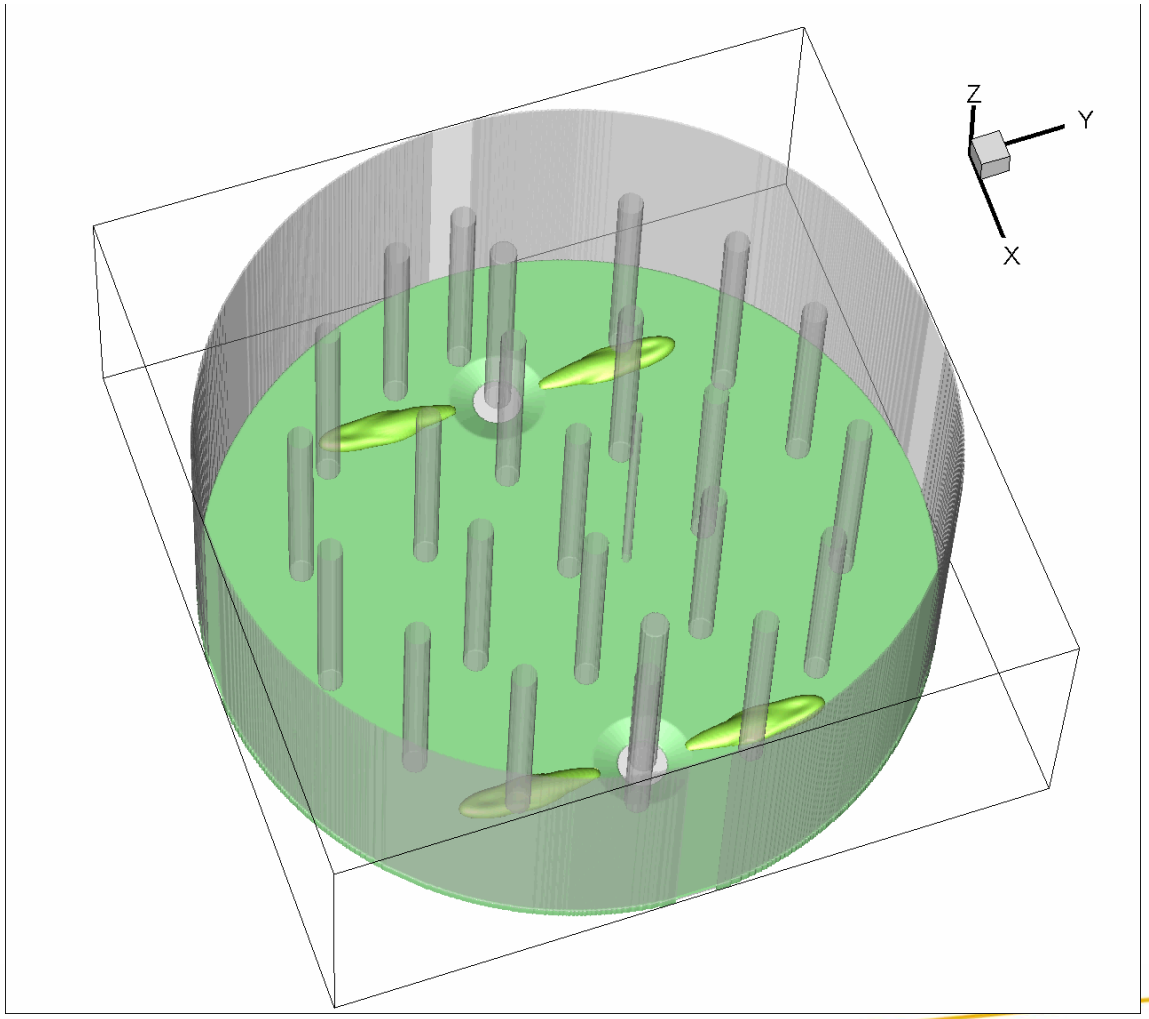

Pacific Northwest
NATIONAL LABORATORY

Print

Close

Jet Pump Modeling

- Multiphase Simulations using ParaFlow
  - Developed at PNNL under LDRD
  - Flow solution using lattice kinetics
  - Near linear scaling on parallel computers
  - Dynamic sediment bed model (vs. no bed)
  - Complex geometries
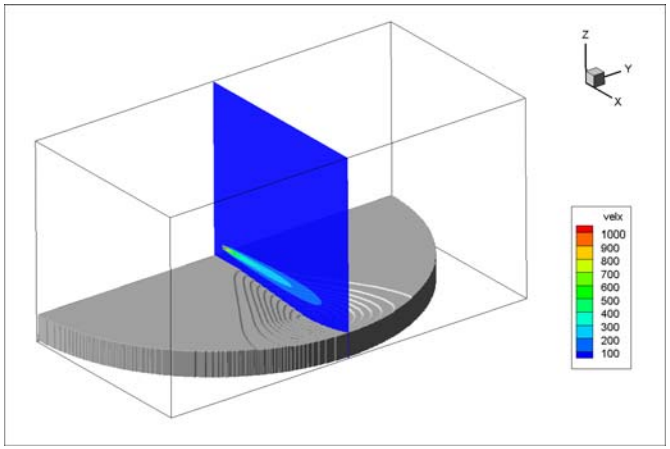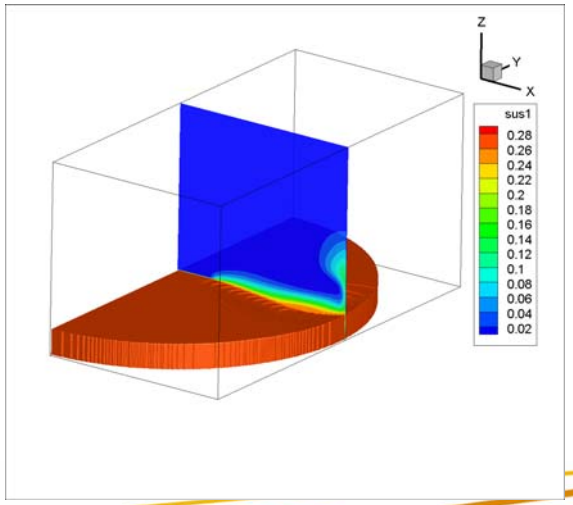
- Other features
  - Hierarchal grid structure
  - Thermodynamic chemistry