Solid Liquid Interface Monitor (SLIM)

Jose Varona
D. Roelant, A. Awwad, D. McDaniel
Florida International University's
Applied Research Center

EM Waste Processing Technical Exchange
November 17, 2010

Print

Close

Disclaimer

This presentation was prepared as an account of work sponsored by an agency of the United States government (Department of Energy, Office of Environmental Management, under Grant No. DE-FG01-05EW07033). Neither the United States government nor any agency thereof, nor any of their employees, nor any of its contractors, subcontractors, nor their employees makes any warranty, express or implied, or assumes any legal liability or responsibility for the accuracy, completeness, or usefulness of any information, apparatus, product, or process disclosed, or represents that its use would not infringe upon privately owned rights. Reference herein to any specific commercial product, process, or service by trade name, trademark, manufacturer, or otherwise does not necessarily constitute or imply its endorsement, recommendation, or favoring by the United States government or any other agency thereof. The views and opinions of authors expressed herein do not necessarily state or reflect those of the United States government or any agency thereof.

Agenda

- Objective
- Initial Research
- System Versions
- Current Prototype
- Testing

Objectives

- Research technologies to map the sludge/supernate interface within Hanford HLW tanks
  - Technologies could improve on baseline method for solids level detection (weighted ring)
- Verify candidate technologies ability to accurately map within defined operational and environmental conditions
- If proven viable, develop a prototype system that can be deployed within HLW tank
  - Technology would have to survive the rigors of the tank environment

Initial Criteria

- Collects multiple point measurements over 5 ft^2, moves up and down in the tank, and does not depress the interface it is measuring;
- Collects liquid samples from multiple point locations over 5 ft^2, moves up and down in the tank, and does not change the interface it is measuring; or
- Provides an active signal that interacts with the two-phase waste fluid and then is detected to determine the interface.

Initial Research

- Three mature technologies identified
  - Density meter
  - Electrical Imaging
  - Ultrasonic (US) Profiling (SONAR)
- Candidate Technologies
  - Electrical Resistance Tomography (ERT)
  - Ultrasonic Profiling

Electrical Resistance Tomography (ERT)

- Measurement of resistance of inter-electrode paths based on injected current
- Linear probe with array of electrodes
- Uses algorithm for determining inter-gap spacing

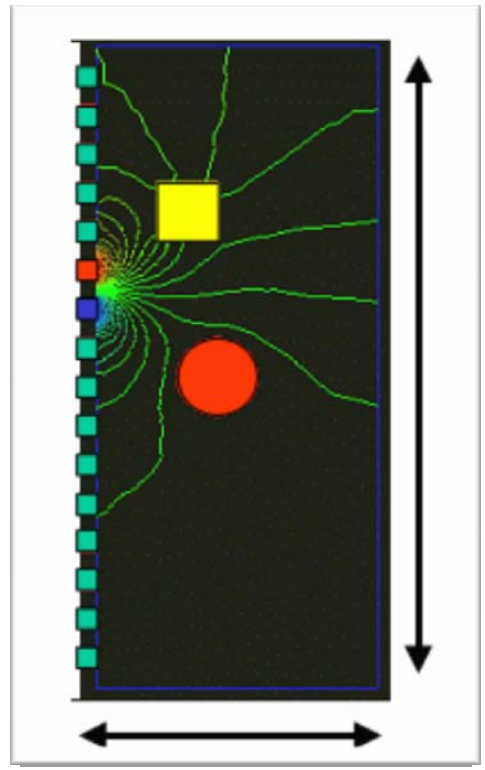

Electric field generated for 18-electrode system

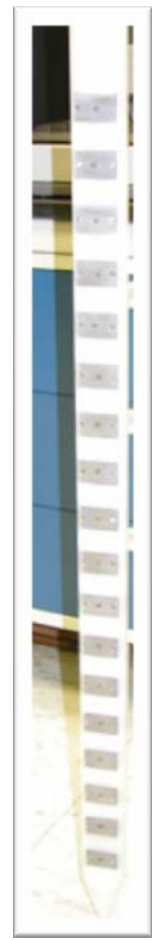

ERT Linear Probe

ERT Experiments & Results

- Interface detection
- High-low conductivity detection
- Issues
  - Requires fixed probe,
  - Images small radial distance away from probe
  - Limited number of measurements

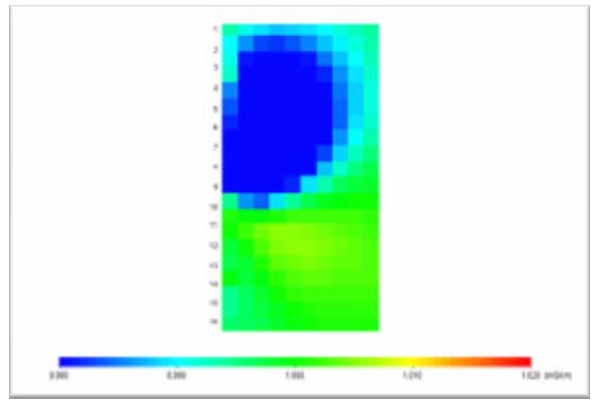

ERT Map of low conductive object near probe

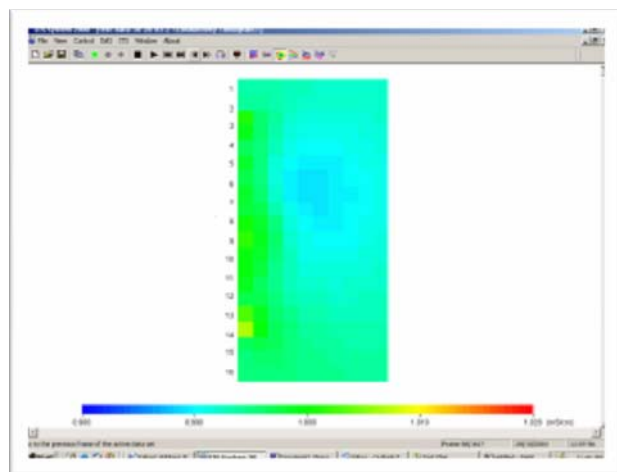

ERT map when object moved 3 inches away

Ultrasonic Profiling (SONAR)

- Narrow-angle US pulse
- 625 kHz to 1.5 MHz
- surface gradients
- 0.3 – 1.9 degree beamwidth
- Up to 100 m range
- Can operate in solution with suspended solids/opaque solutions

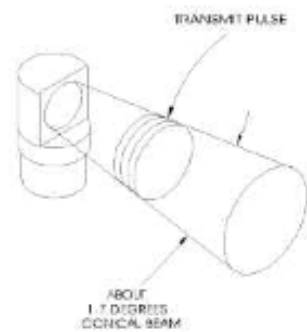

Transducer pulse transmission

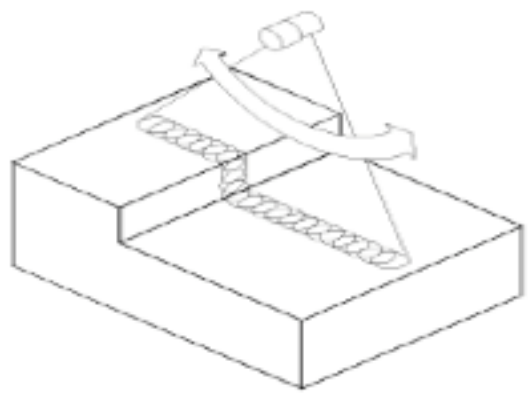

Scanning methodology

US Profiling Validation Experiments

1. Quantified image resolution (distances) to objects & settled solids layers
2. Demonstrated ability to detect solids with density close to the fluid in which they are immersed (slow settling materials)
3. Demonstrated sonar can image interface even during agitation with 30% (wt) suspended solids in the liquid
4. Determined minimum distance sonar must be from a wall or waste layer to accurately image it
5. Demonstrated chemical compatibility of sonar and cable to caustic solution (pH=14)
6. Demonstrated the ability to generate accurate 3-D images of settled solids layers from multiple 2-D sonar datasets

Experiment 2: Image Low-Density Solids

- Detection of metal forms filled with plastic beads (rho = 1.04 g/cc)
- Various heights and form shapes used
- Maximum relative error on height measurements was 0.6%

Experimental setup

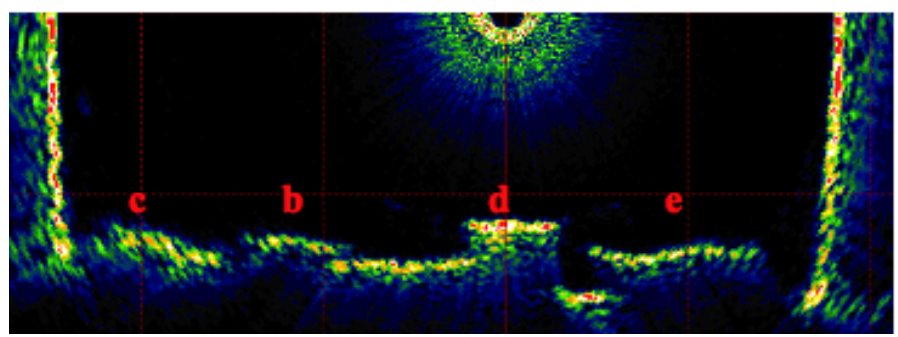

Sonar sector scan showing detected interface

Experiment 3: Image during Mixing

- Identify solid objects (interface) with 30% suspended solids in liquid layer
- Kaolin clay interface
- Maximum relative error of 0.5%
- Images can contain “ghost” layers due to backscattering reflection

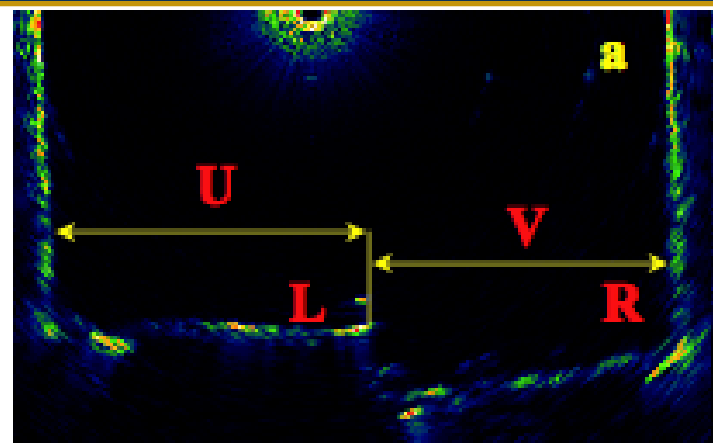

Undisturbed interface

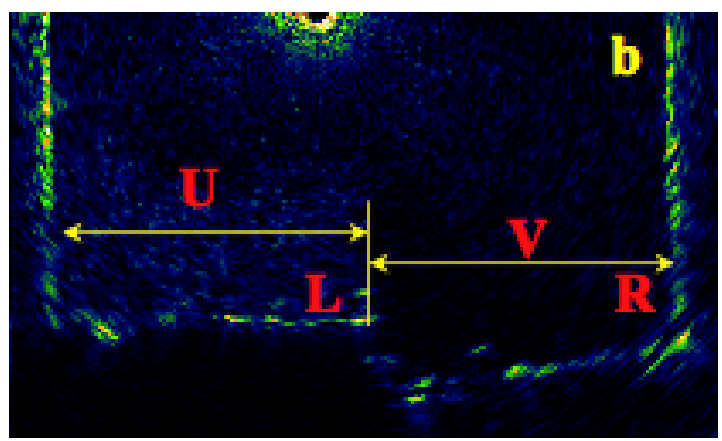

Interface during mixing

Experiment 4: Minimum Distance between Transducer and Interface

- Detection of objects when metal plate near transducer (vertical)
- Height measurement when near object being measured
- Maximum relative error of 0.4% when metal plate 10 in away
- Relative error over 10% when ≤ 6 in. from object

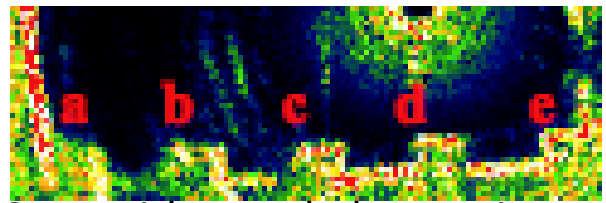

Scan with metal plate 14 in. away

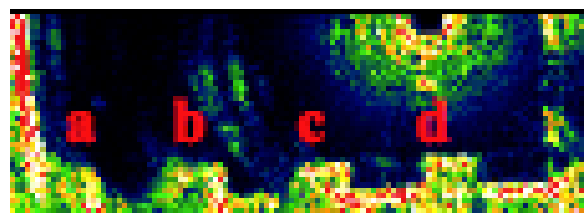

Scan with metal plate 10 in. away

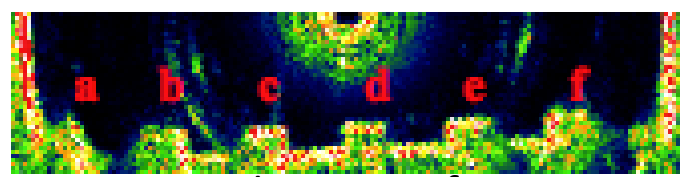

Scan with sonar 1 ft away

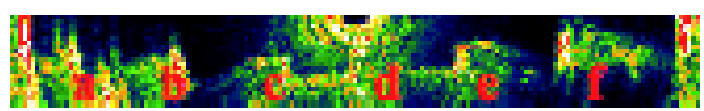

Scan with sonar < 6 in. away

Test Conclusions

- Profiling sonar images several square meters of interface of solids surface in the large HLW tank. The accuracy of the height of the interface is ±0.36 cm or better at a 2 m range.
- Even with 30% by weight of solids suspended in the liquid sonar is able to accurately measure the solid-liquid interface with ±0.91 cm or better at a 2 m range.
- Sonar can detect with accuracy of ±0.36 cm (at 2 m range) settled solids having a density of 4% greater than the fluid in which they are immersed. These lighter solids are easily suspended and can take some time to resettle.

Test Conclusions (cont'd)

- Based upon the material selection for the sonar head (Titanium hull) and its cable (Polyurethane outer coating), caustic solution (pH>14) does not have an effect on the sonar's ability to generate images and function properly.
- *Sonar's imaging is not effected by changing either the solution density or the temperature. Only measurements between the relative points are effected. This is due to the change in sound speed with density and temperature.*

Technology Development Requirements

- Detect a solid-liquid interface during and after settling.
- Withstand exposure to both high-level radiation dose and highly caustic solution (pH > 14).
- Operate in a range of 75-320 inches above the bottom of the tank.
- Be deployable through a 4-inch riser at the top of the tank.
- Operate in liquid 2 feet or more above the settled solids layer.
- Identify the average interface elevation integrated over an area of at least 5 ft^2.
- Avoid disturbing the interface by the act of measuring.
- Be capable of at least hourly readings of the interface.
- Provide isolation from system and tank during retracted state.*
- Provide system containment from outside environment.*
- Minimize potential for shear loads to be applied to riser.*

SLIM Theory Of Operation

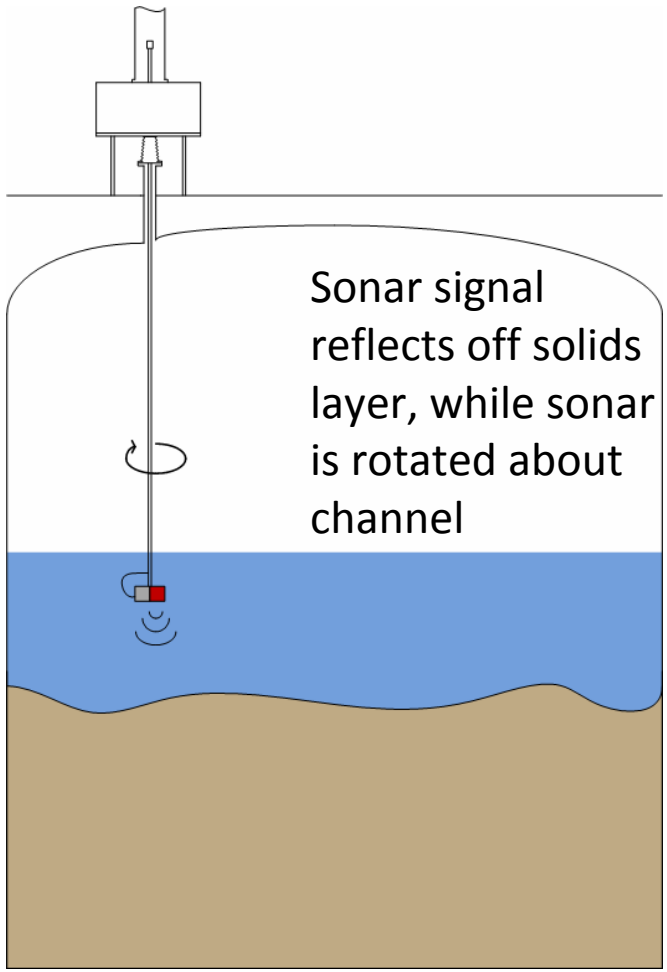

2D "slices" collected

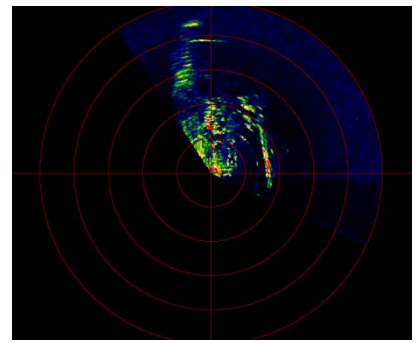

3D Map Generated

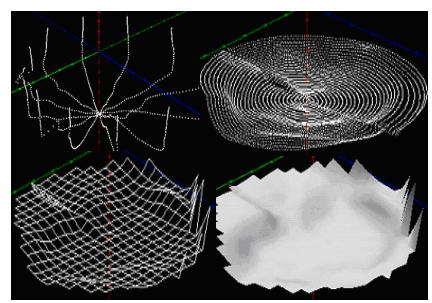

Print

Close

Solid Liquid Interface Monitor (SLIM) 1st Generation

- Consists of 2D profiling sonar
- Deployment platform lowers sonar into tank using gear rack mounted on uni-strut® channel
- Sonar head is rotated into scanning position using linear actuator
- Sonar pings solid surface, generating solid layer "slices", while turntable assembly rotates channel 0 – 180 degrees
- Several "slices" are combined, and remaining area is interpolated, to generate 3D map

SLIM Design Modifications

Local Operation

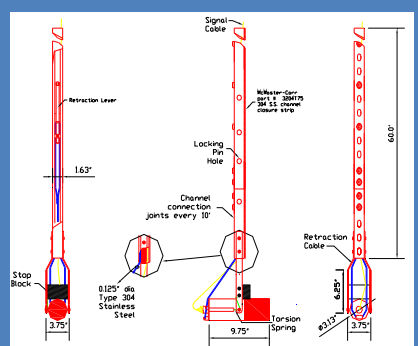

Remote Operation

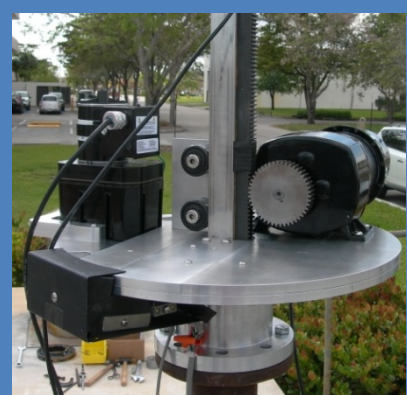

Contained System

SLIM Turntable Assembly

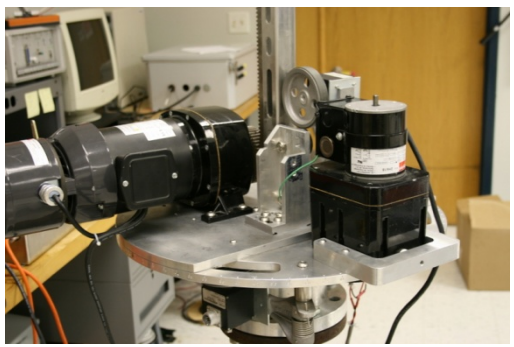

Turntable assembly with channel

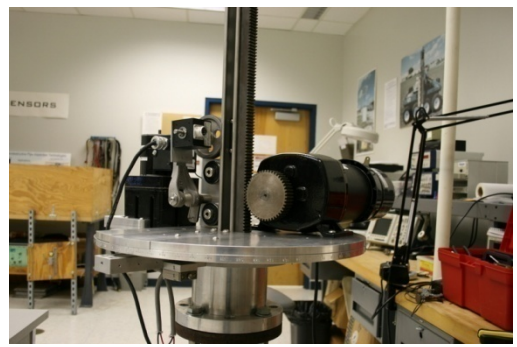

Turntable assembly with channel (opposite)

Containment enclosure with turntable assembly

Sonar head

Linear Actuator

Assembly in enclosure

SLIM Containment System

SLIM system

SLIM system rendering
(side panel removed)

Assembled SLIM system
(without channel)

Design Drawbacks

- 2D profiling sonar
- Complex kinetics
- Commissioning
- Cable management

SLIM (2nd Generation)

- 3D profiling sonar
- Deployed with obedient tubing
- Electric reel for deployment
- On-board “wet” sensor
- No on-board electronics (PZT transducer, two stepper motors)

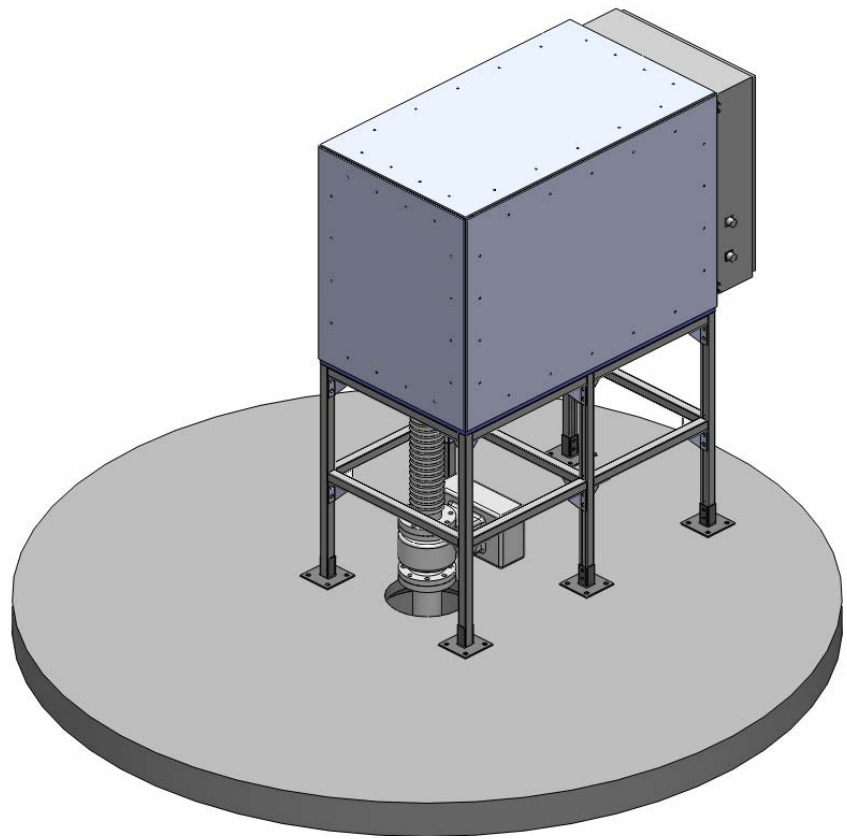

2nd Generation SLIM Design

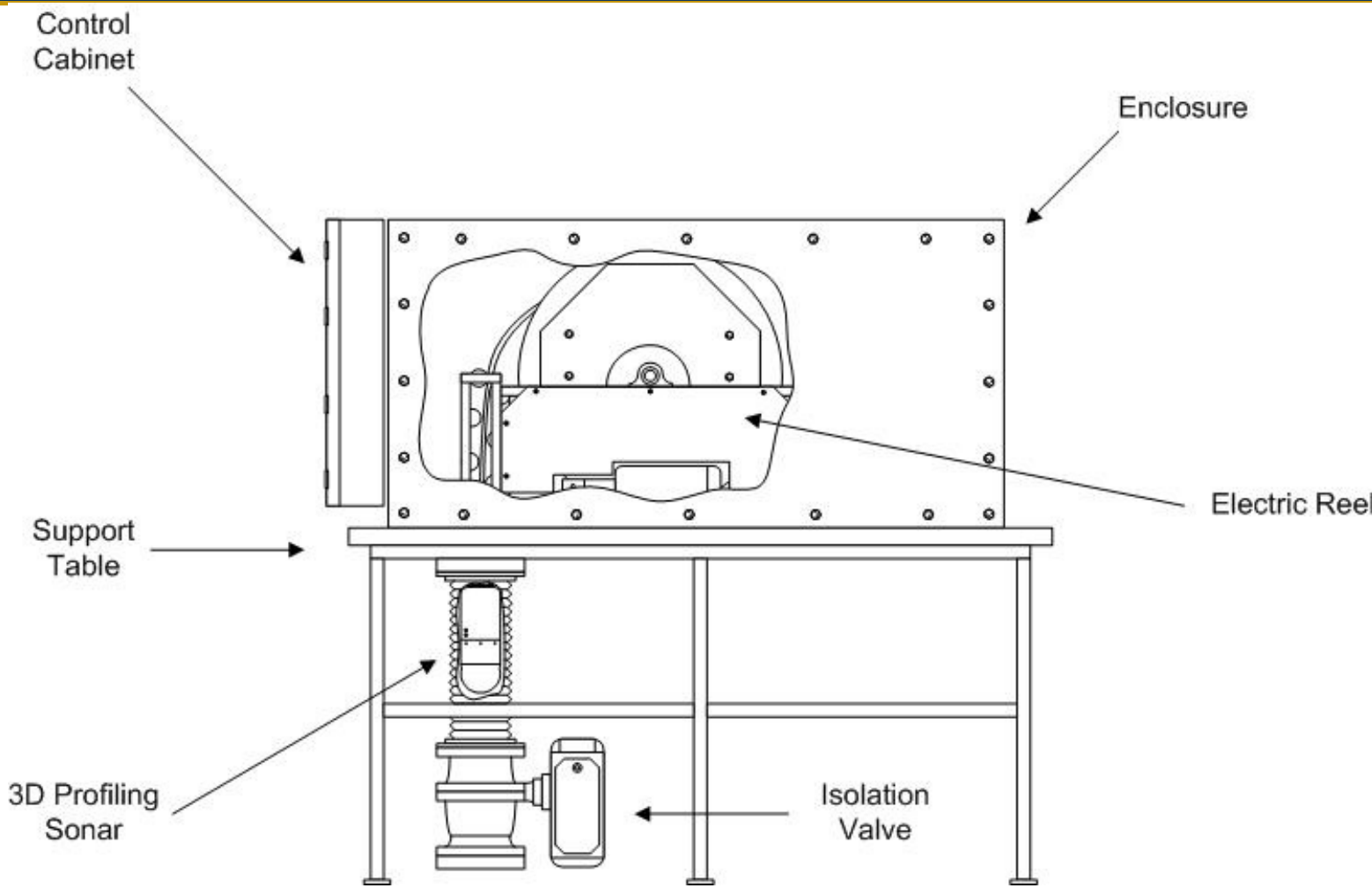

2nd Generation SLIM Design (cont'd)

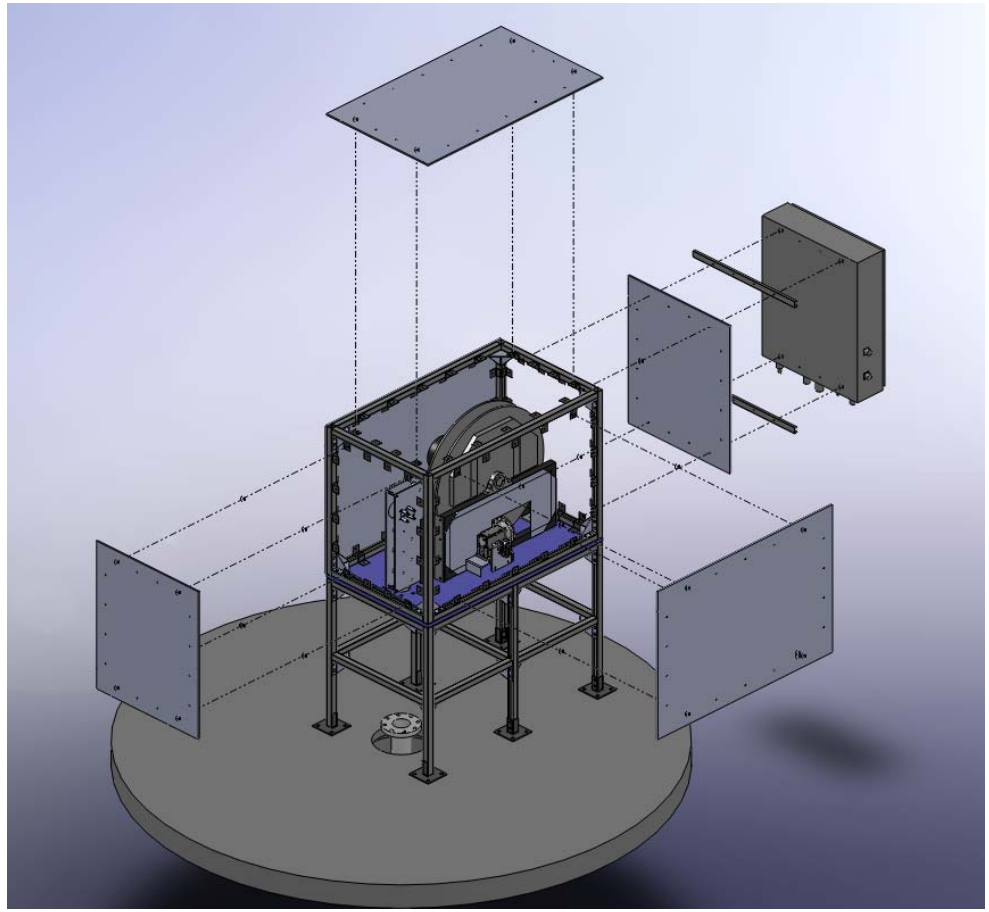

SLIM Exploded view (without isolation valve or bellow)

2nd Generation SLIM Design (cont'd)

SLIM with containment panels removed

SLIM assembled

3D Profiling Sonar

- 3-axis transducer motion
- Titanium housing
- PEEK Boot
- Polyurethane cable
- Amphenol marine connectors
- 1.1 MHz
- 10 mm resolution @ 1 m

3D Profiling Sonar installed on SLIM

Obedient (Gooseneck) Tubing

- Semi-rigid tubing
- Stainless steel 316
- Stainless steel conical coupling
  - Mitigates any catching during retraction
- Provides additional cable shielding and protection

Sonar coupling attached to obedient tubing

Obedient tubing wound on reel

Electric Cable Reel

- Stainless steel
  - 304 hub
  - 316 all other parts
- Explosion proof DC motor
- Speed reducer
- Chain drive
- 25 fpm feed rate (at motor FS)
- Slip ring used to feed sonar cable to controller

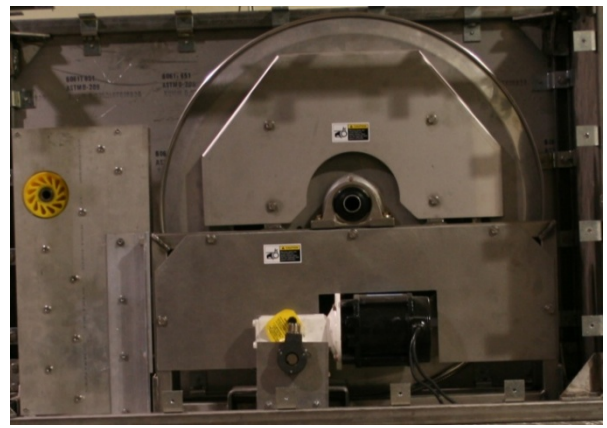

Cable reel installed in containment system

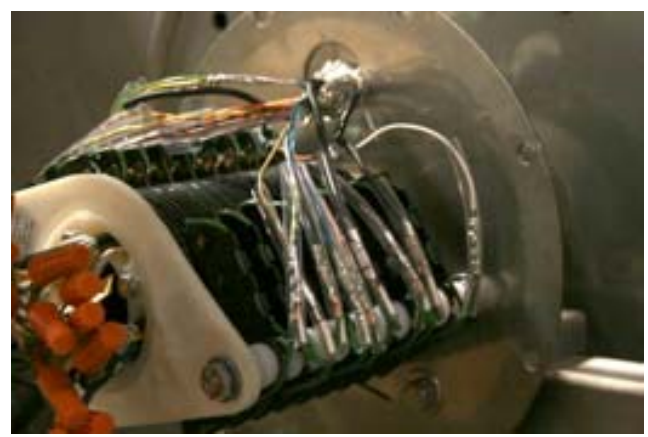

Reel slip ring

Gooseneck Routing

- 8 Stainless Steel 316 rollers
- Mounted to reel via two SS plates
- Straightens gooseneck tubing during travel
- Yellow polyurethane wheel rides on gooseneck to track movement

Gooseneck routing installed on reel; 3 rollers and yellow encoder wheel visible

Containment

- Enclosed reel and sonar
- Cable connections on panels (no feed through)
- Stainless steel frame
- Bellow
- Motorized ball valve for tank isolation

SLIM Bellow

Sealed SLIM System

Control System

- National Instruments® CompactRIO PAC
- Limit switches for retraction and deployment limit
- Two encoders (reel/gooseneck)
- TCP/IP control
- Software
  - Deployment control
  - Sonar and mapping functions

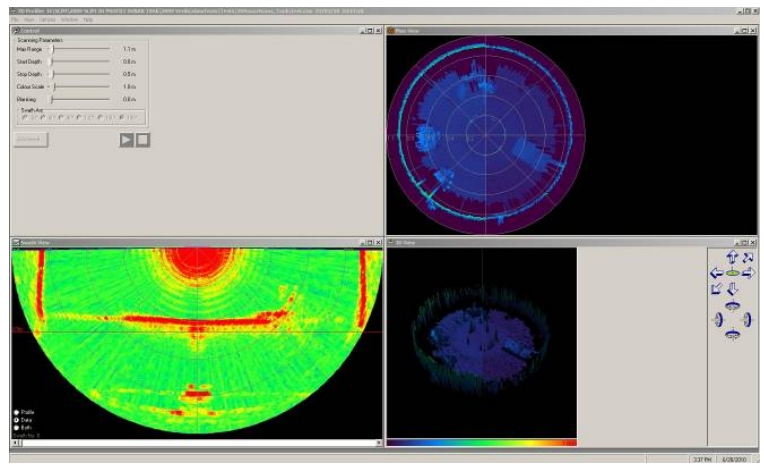

Sonar Software

SLIM Control Center

Sonar Mapping Tests

- Map 6 ft diameter tank with several objects (~ 30 sq ft)
- Determine small object heights and widths at 1 ft from tank bottom
- Smallest object had < 10 mm height graduations
- Max relative error 1.1% for height measurements
- Max relative error 6% for width measurement

Sonar Mapping Test (cont'd)

Tank objects; sonar placed within 1 ft of tank bottom

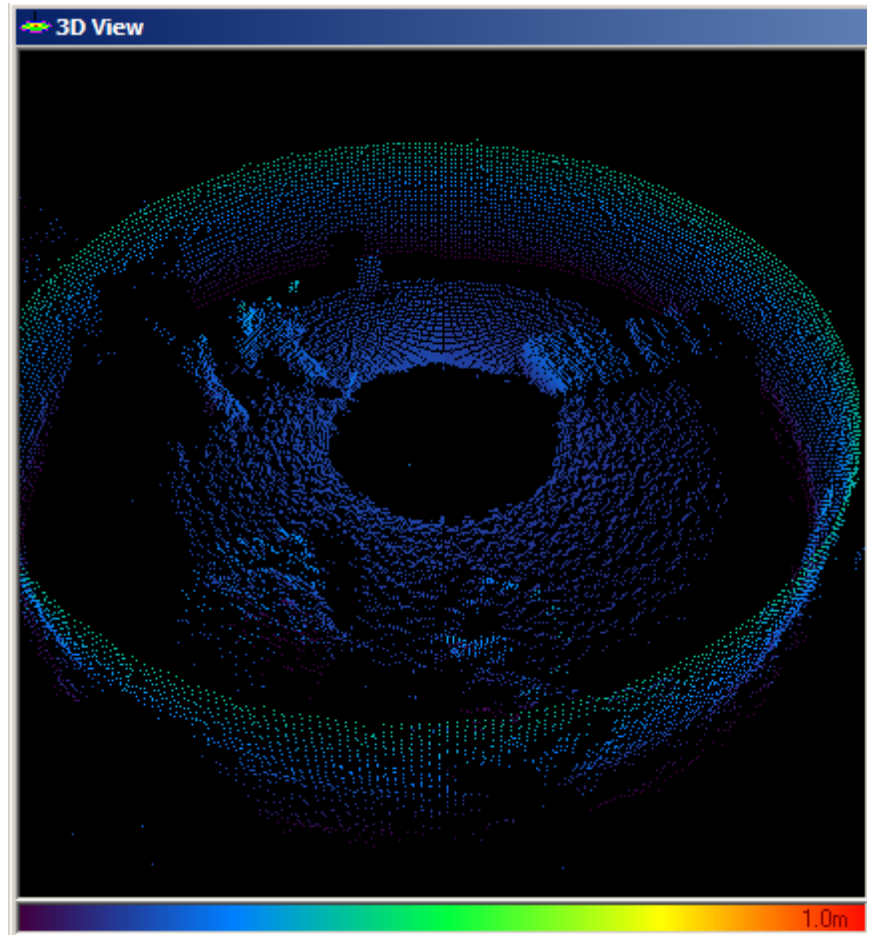

Resulting filtered map of tank bottom

Software Filtering

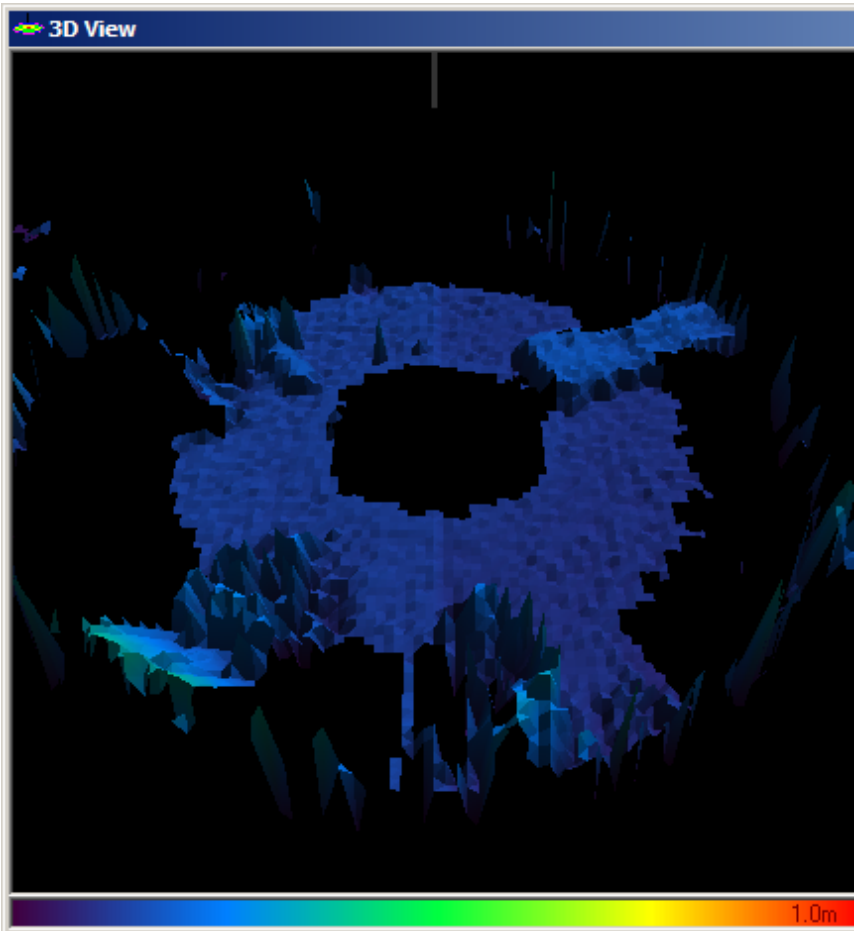

Unfiltered Map

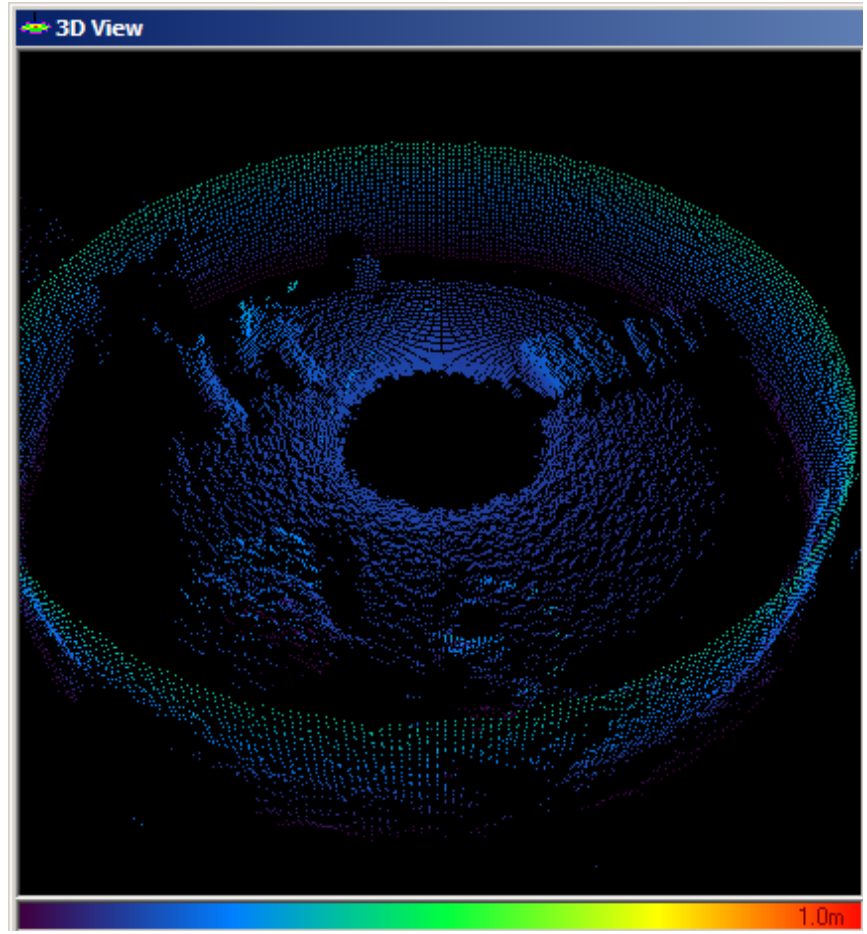

Filtered Map

Software Filtering (cont'd)

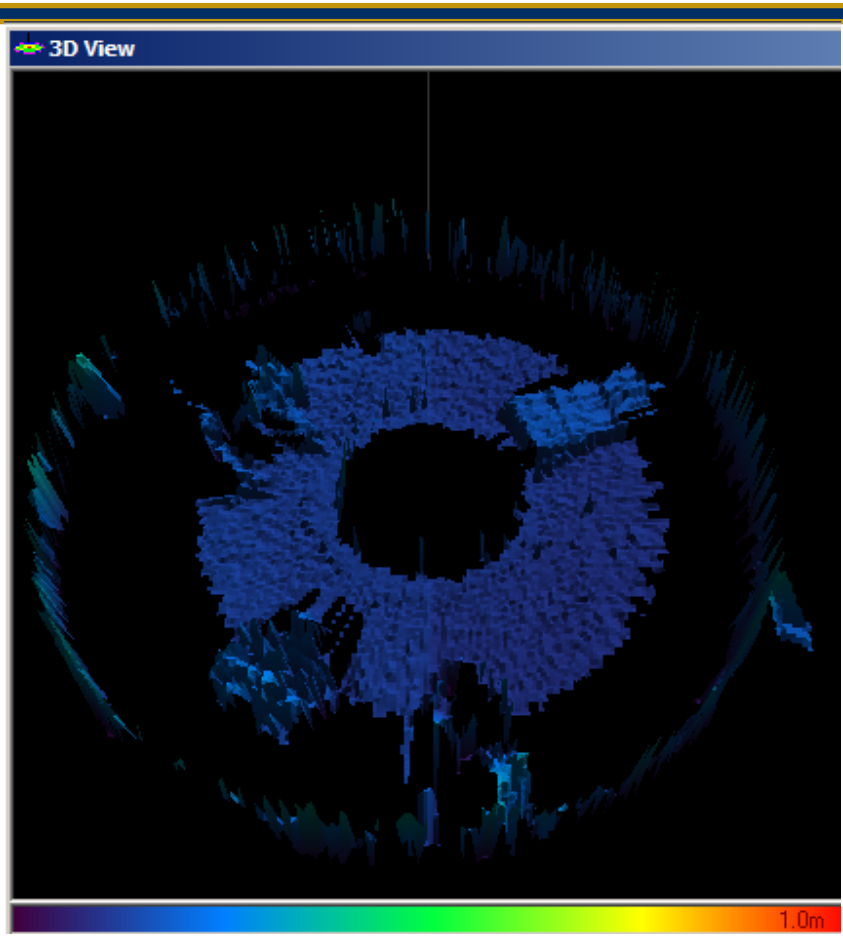

Unfiltered Map

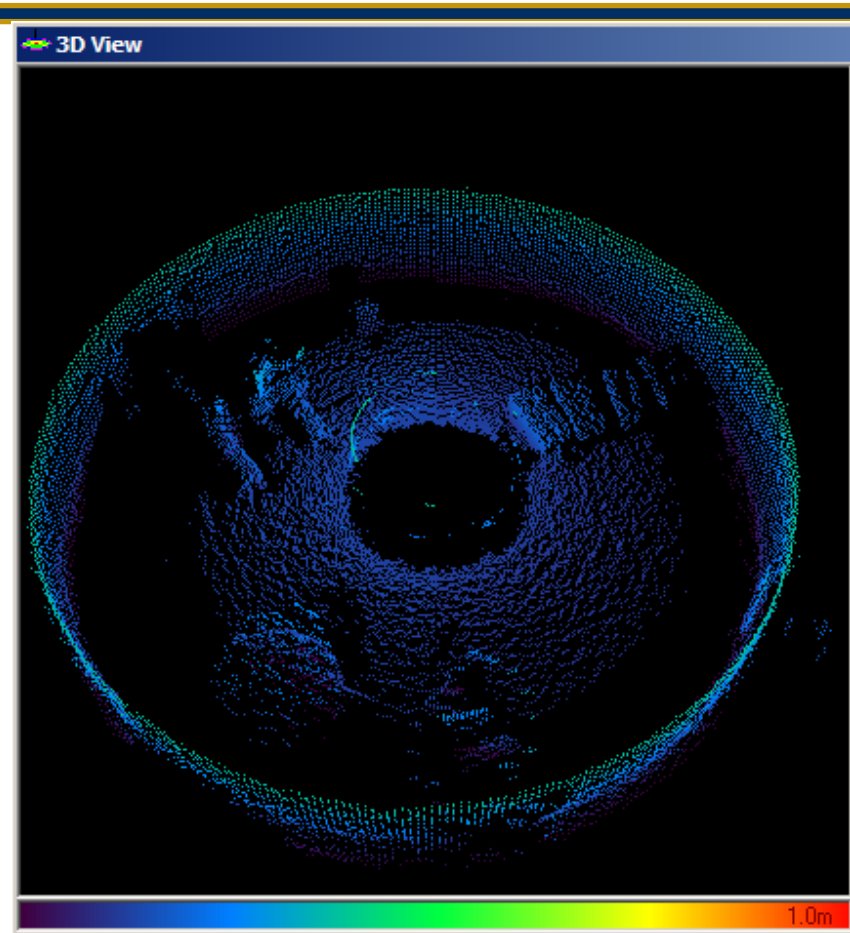

Filtered Map

Deployment Tests

- Sonar lowered into 24 in fluid-filled tank
- Deployment, retraction, damping time measured
- < 3 min damping time (no fluid agitation)
- Swaying caused by wind loads
- Deployment/retraction time approx 2.5 minutes for 50 ft
- Retraction rate 25% slower due to reel adjustments that occur during gooseneck winding

SLIM suspended for deployment test

Issues / Possible Improvements

- Software integration
- Improved retraction limit switch
- Addition of sprocket-shaped weighted ring into sonar coupling; improve damping time, control any possible torsional effects of fluid currents
- Speed of sound calibration point harness

Project Conclusions

- SLIM improved method for mapping solids layer, detecting slow settling solids depth, and monitoring tank filling process
- Deployment platforms are useful for additional sensor packages (Raman probe, densitometer)
- 3D sonar could also be deployed in static configuration, depending on tank needs

Thank you!

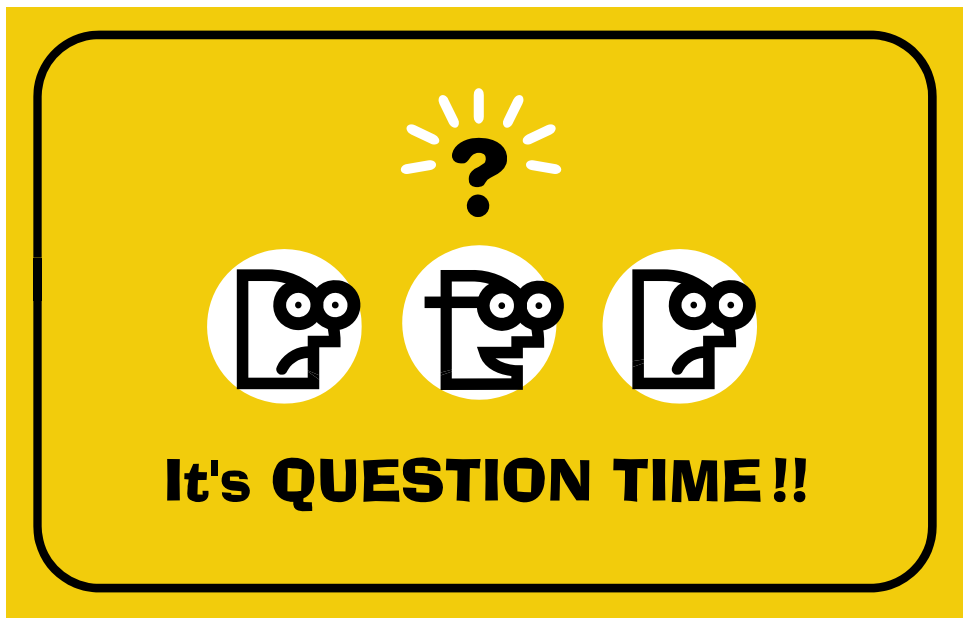

Print

Close