Development of a Thin Film Evaporator for Deployment at Hanford Tank Farms

EM Waste Processing Technical Exchange

November, 2010
Atlanta, GA

Allan R. "Rick" Tedeschi
Washington River Protection Solutions, LLC
Contractor to the United States Department of Energy

Agenda

Summary

Development and Project Background

Pilot-scale Development

Laboratory-scale Development

Full-scale Development and Deployment

Summary

Purpose

Report on thin-film evaporative technology development effort, and describe path forward for technology deployment

Project Summary

Have completed pilot-scale testing with Hanford tank waste simulants; implementing full-scale simulant and laboratory actual waste development testing

Pilot-scale Testing Results

✓ Pilot-scale testing has successfully demonstrated concentration of supernatant simulants to 1.4 – 1.5 specific gravity (sp gr)

✓ Pilot-scale testing has refined and confirmed design of full-scale development testing platform

Pilot-scale Evaporator
Columbia Energy & Environmental Services

Mission

- Provide risk reduction to 242-A Evaporator critical downtime by installing supplemental evaporative capacity
- Support and facilitate accelerated single-shell tank retrievals

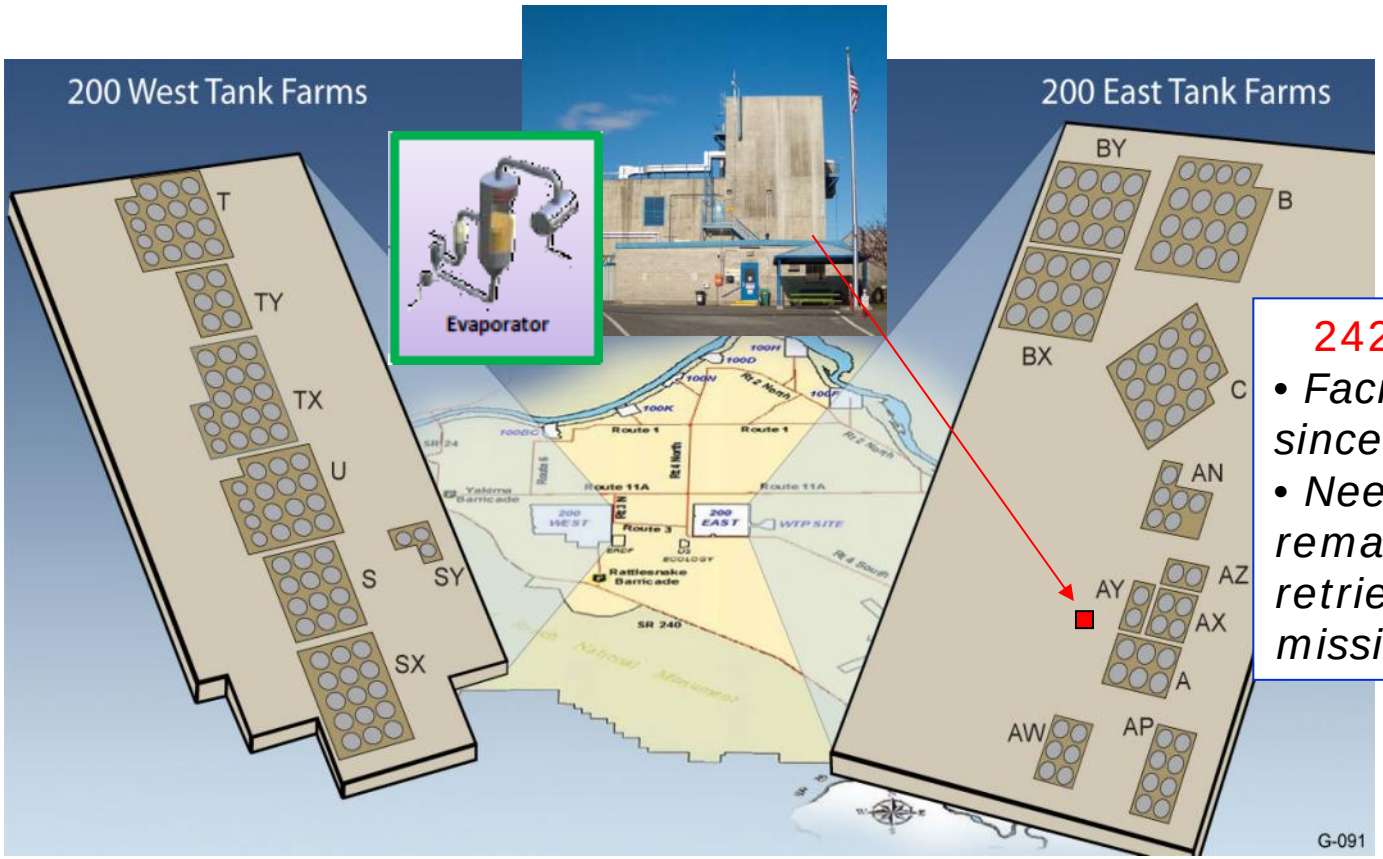

242- A Evaporator

- *Facility in operation since 1979*
- *Need for majority of remaining Hanford retrieval and storage mission*

Print Close

Retrieval Support

- At-tank evaporation minimizes issues from current transfer routes, decoupling critical DST space management from retrieval operations to support retrieval acceleration

200E, 200W, & Cross-Site Transfer Routes

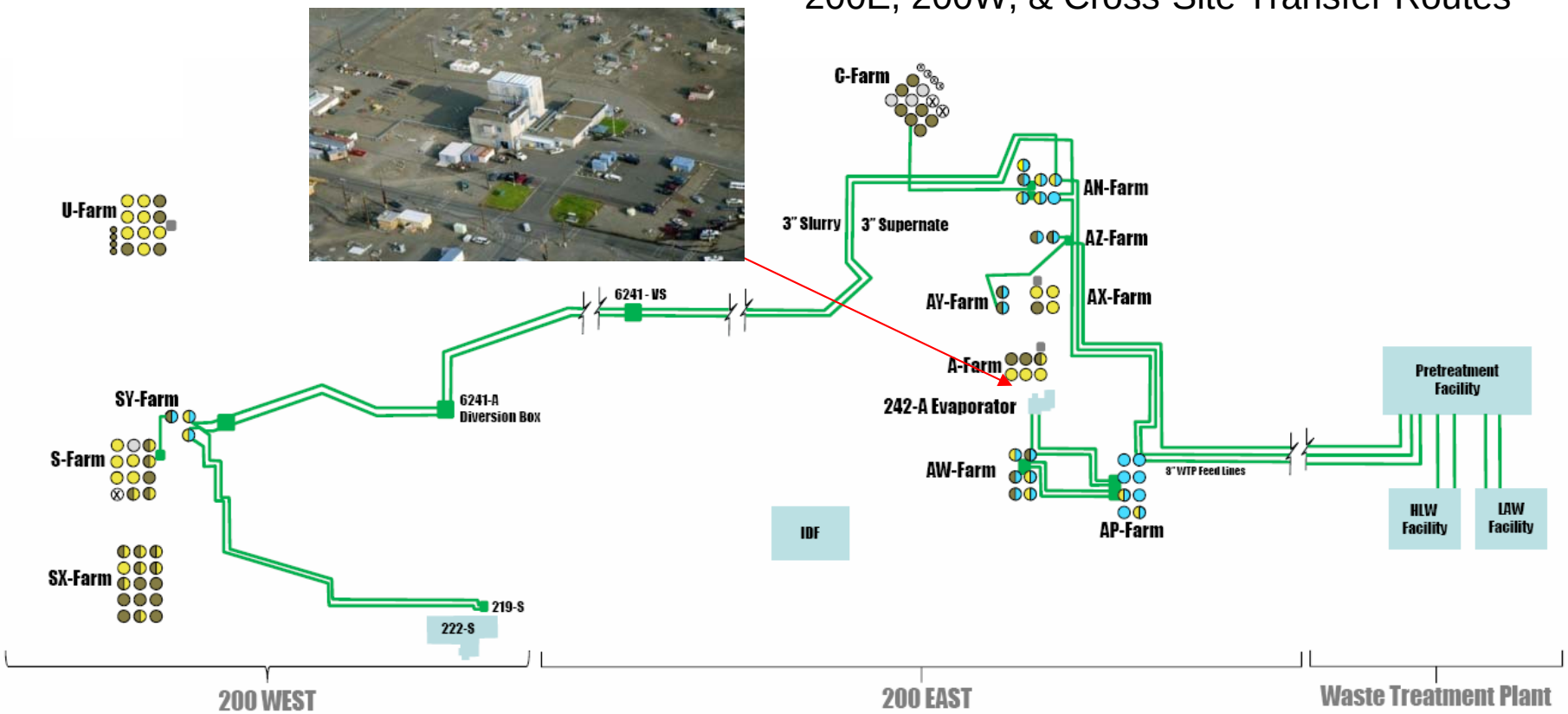

Cut-away from draft ORP-11242, *RPP System Plan – SP5*

Print

Close

Project Vision

- At-tank, modular/transportable, evaporative system [1]
- Concentrate tank supernatant solution
- Apply commercial technology; transform to nuclear operation
- Supplement existing fixed evaporator facility to support retrievals

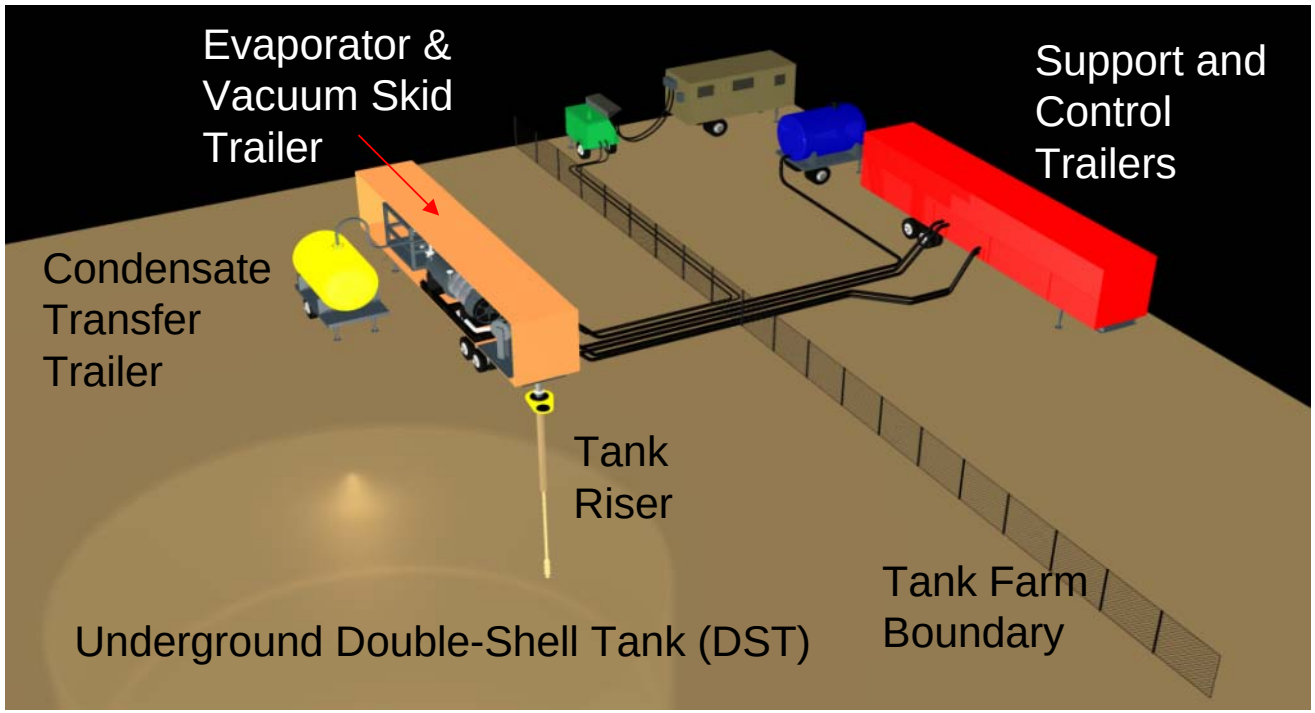

Note 1: Concept described in Columbia Energy & Environmental Services 2007 patent application

Evaporative Technology

- Thin Film Evaporation
  - High vacuum, low temperature film evaporation
  - Continuous feed and concentrate production
  - Sized per available heat transfer surface area (HTA)
  - Jacketed heating (steam or heat transfer fluid)
  - Blade forms thin film for heat transfer (does not contact wall)

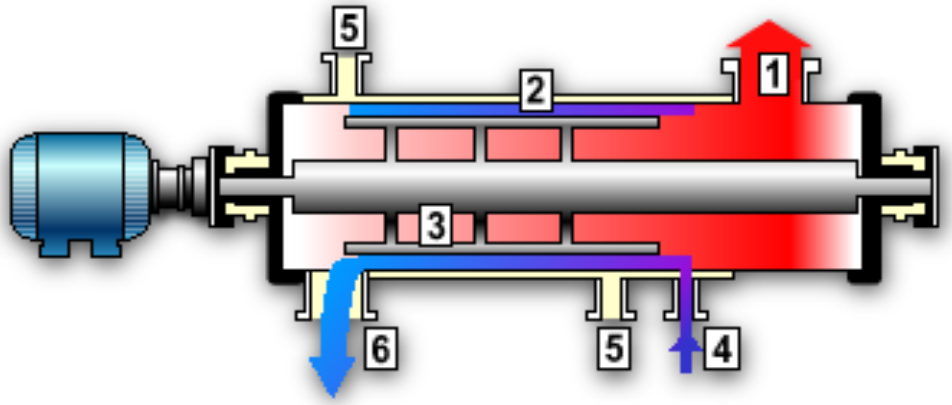

1 Vapor Out
2 Process Wall
3 Rotor Blades
4 Feed In
5 Heating Medium In/Out
6 Bottoms Discharge

Source: Artisan Industries

Proof of Principle Pilot-scale Testing

- 2007 Energy Solutions and Columbia Energy & Environmental Services conducted pilot-scale tests with DST waste simulants

Simulant	Specific Gravity		Specific Gravity Goal
	Start	End	
DST #1 Env. A	1.36	1.52	1.47
DST #2 Env. C	1.40	1.49	1.47
SST #3	1.24	1.46	1.47

Rotor Blade Close-up

Implementation Through Two Projects

- Wiped Film Evaporator (WFE)
  - Pilot-scale (1 ft^2 HTA) and Full-scale (50 ft^2 HTA) Development
  - Full-scale Deployment/Operation
- Agitated Thin Film Evaporator (ATFE)
  - Laboratory-scale (1/4 ft^2 HTA) Development
  - Laboratory-scale Testing

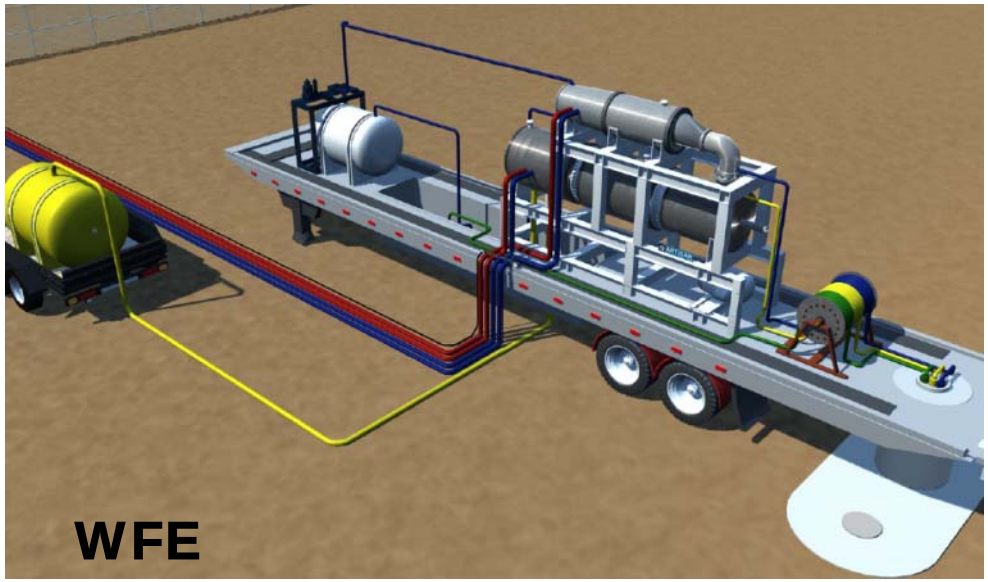

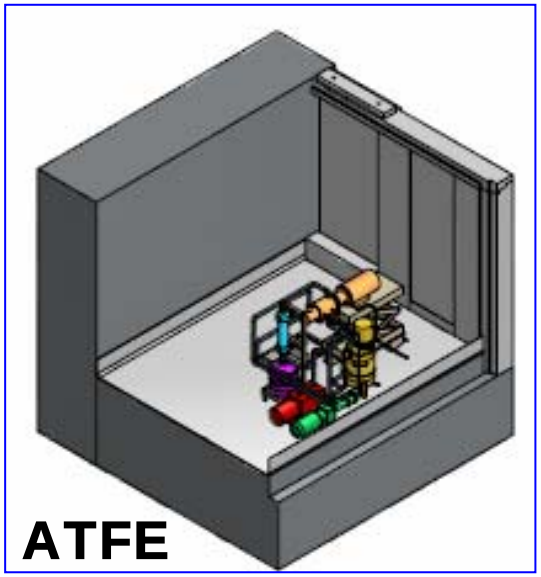

Schedule Summary

- Near-term focus on development of commercial technology through Recovery Act (RA) and Office of Waste Processing (OWP)

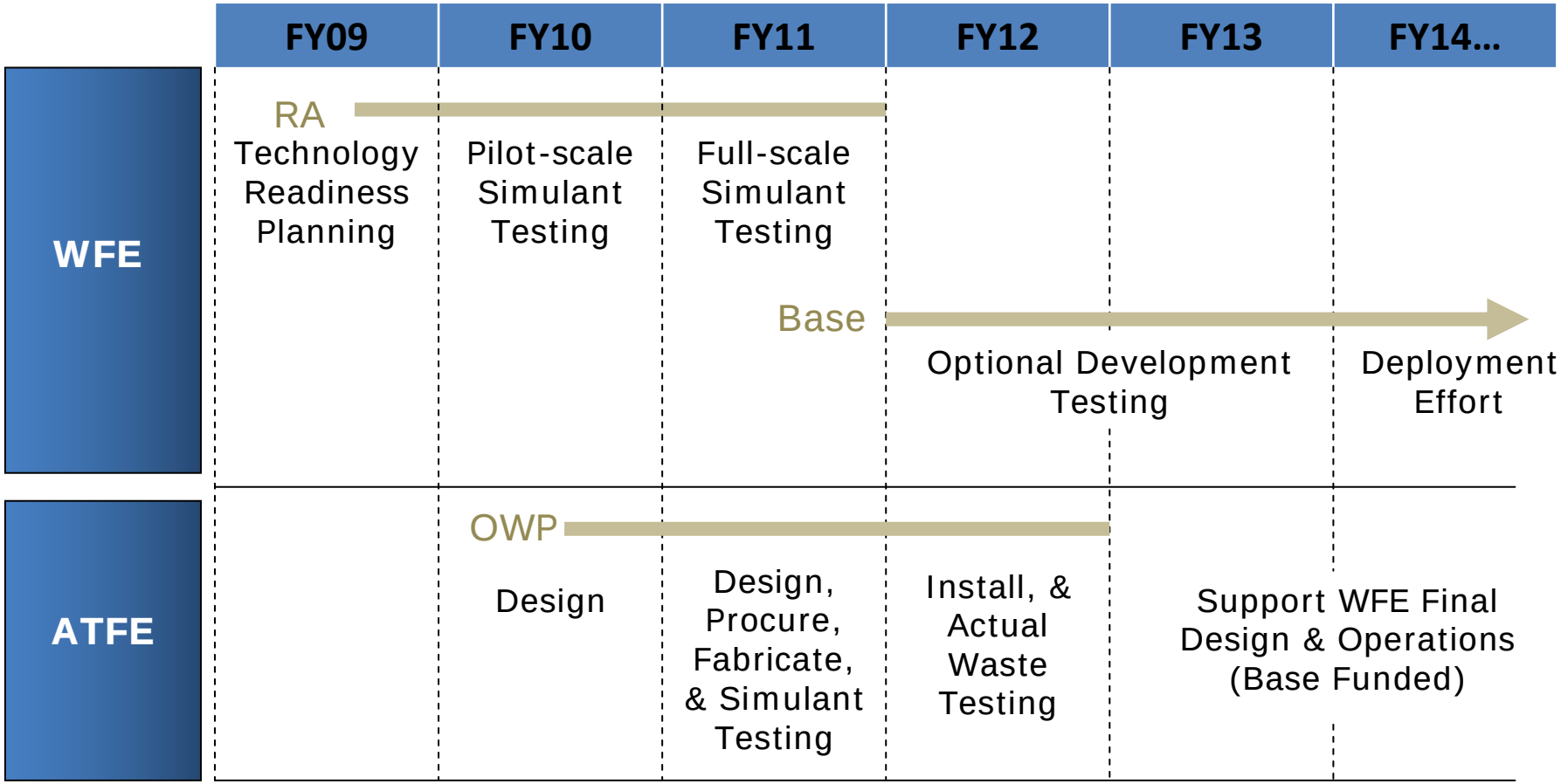

Print Close

WFE Pilot-scale Testing - Overview

- Mature technology from Technology Readiness Level (TRL) 3 through 4 and 5
- Evaluate performance characteristics and quality of output streams (vapor & condensate) with multiple simulants
- Utilize existing Columbia Energy & Environmental Services' pilot-scale system

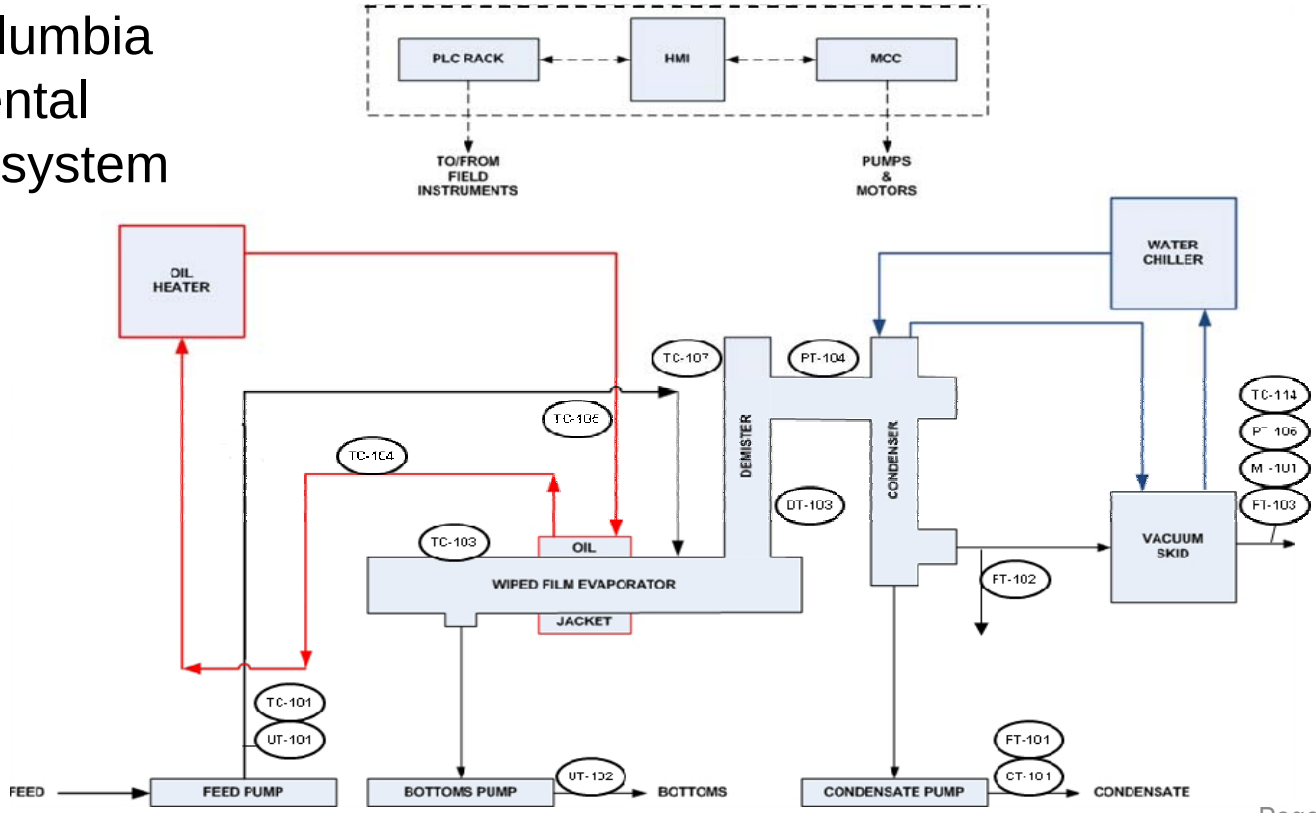

Print Close

WFE Pilot-scale Testing Layout

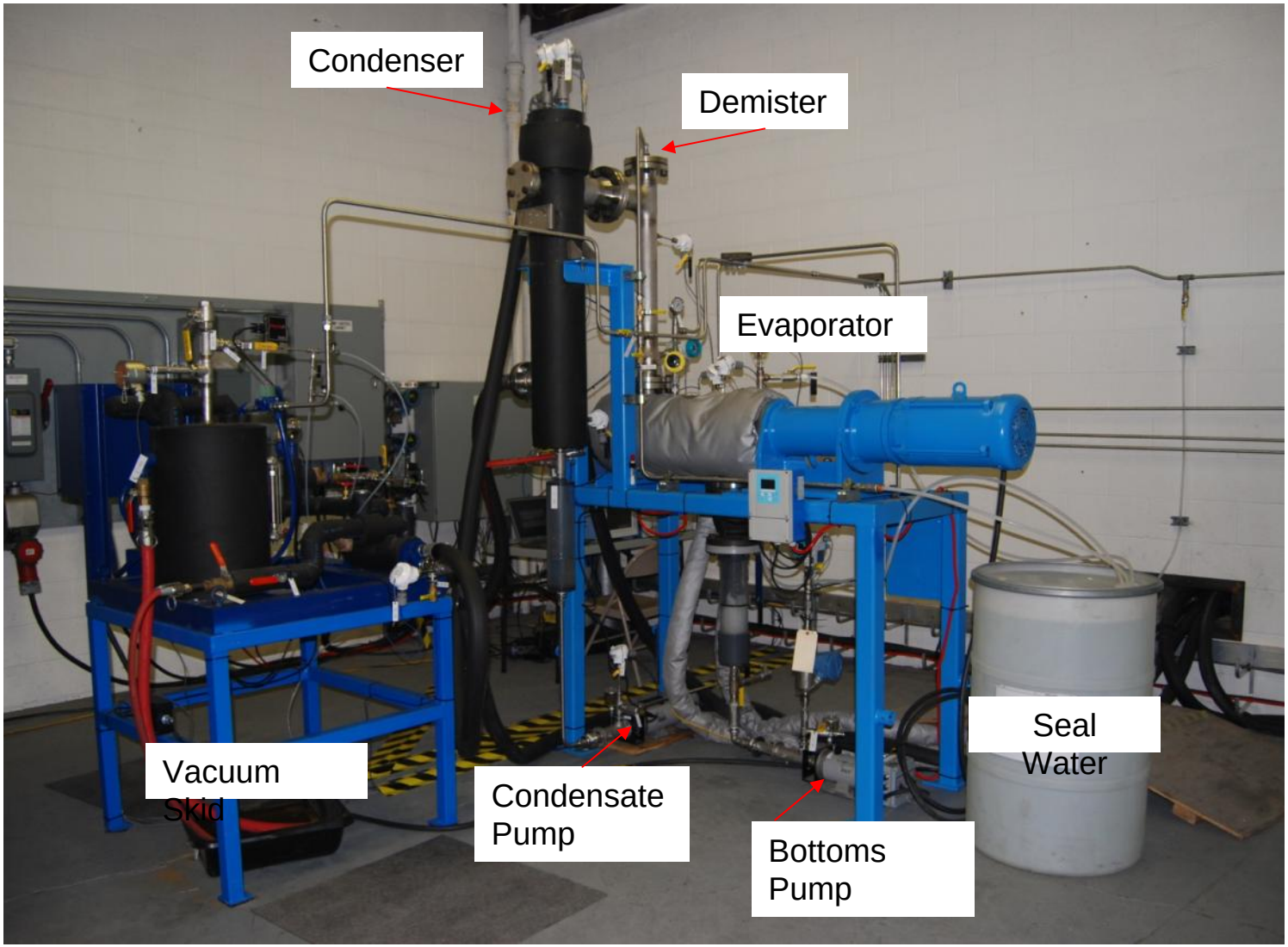

WFE Pilot-scale Testing Results

Simulant	AN-107 (1st Test)	SST	Parameter Optimization Testing	AN-107 (2nd Test)	AN-105
Test Date	2/8 - 2/9/10	2/25/2010		6/8/2010	6/14/2010
Feed Rate (gpm)	0.48	0.48		0.17	0.17
Condensate Rate (lb/hr)	16.8	21.18		22.5	20.52
Condensate Cesium Decon.	55,150	37,190		69,540	553,539
Waste Volume Reduction	0.795	0.731		0.729	0.482
Starting Feed SP GR	1.13	1.12		1.12	1.27
Ending Feed SP GR	1.52	1.43		1.46	1.47
Issues with Disposal Criteria	None	None		None	None

Data Collection at Vacuum Pump

WFE Pilot-scale Testing Optimization

- Twenty runs with simulant optimizing parameters
- Objective: yield maximum condensate rate while maintaining output stream quality through varied operation control settings

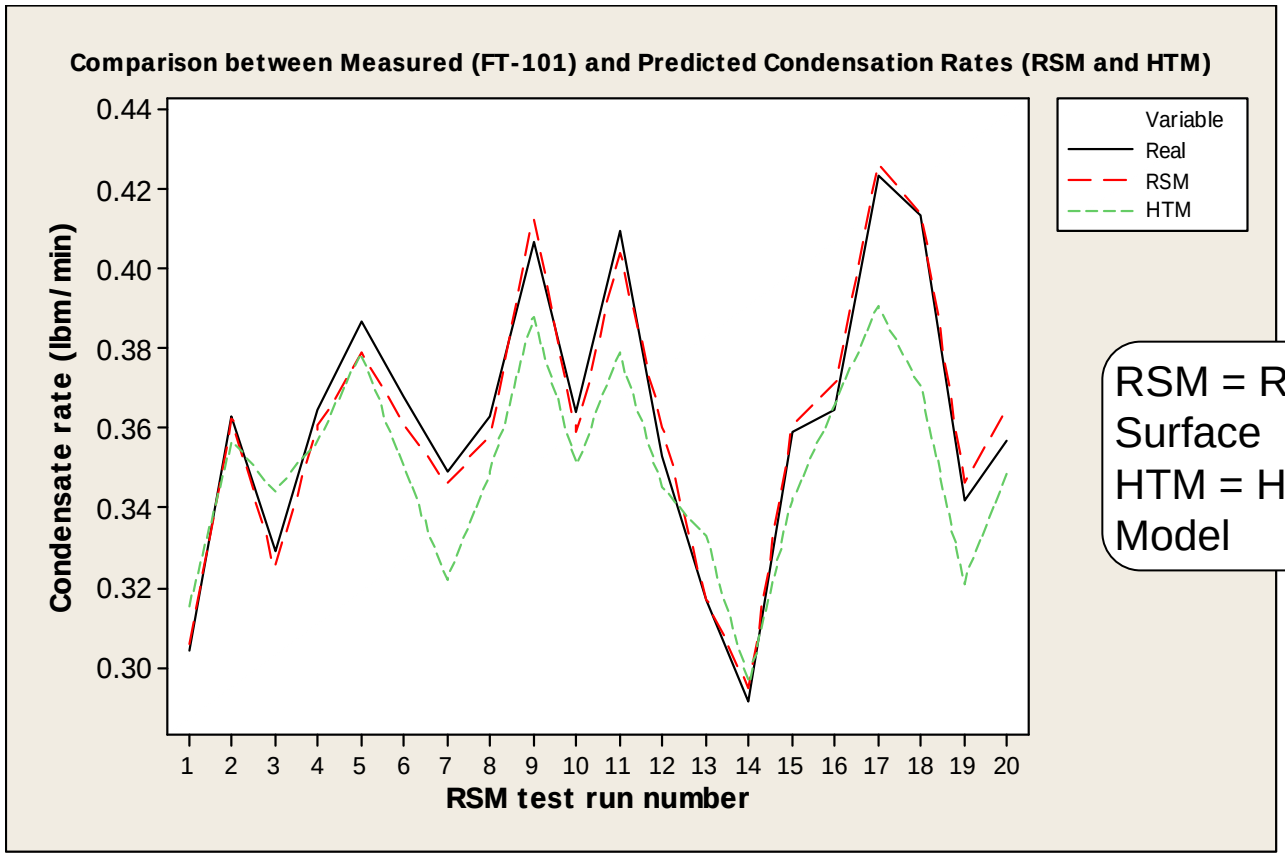

RSM = Response Surface Methodology
HTM = Heat Transfer Model

Print Close

WFE Pilot-scale Testing Conclusions

- Performance Characteristics
  - Final condensate rate exceeded nominal design rate of 20 lb/hr
- Discharged Vapor Quality
  - Direct system discharge will not exceed DST air permit criteria
- Discharged Condensate & Process Streams Quality
  - Streams are below all minimum criteria for on-site Effluent Treatment Facility receipt
- Parameter Optimization
  - Qualified condensate production impacts as (high to low) inlet heat transfer fluid temperature, operating pressure, feed rate
  - Identified key lessons learned: lower feed rate produced more stable operation at same condensate production rate

ATFE Summary

Purpose

- Support technology maturation of the WFE system
- Qualify potential operation issues
- Run pre-campaign samples

Scope

- Use ¼ ft^2 HTA horizontal agitated thin-film evaporator
- Install in 1-E-1 hot cell at 222-S Laboratory
- Utilize same counter-current heat transfer design

Typical ¼ ft^2 Unit

ATFE Challenges

- Hot cell installation for ALARA and cost savings
- Final assembly and operation using manipulators
- Integrating multiple support unit operations

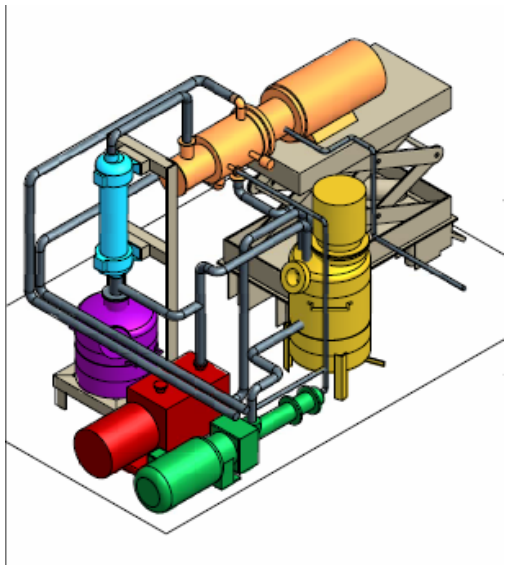

ATFE Design Option

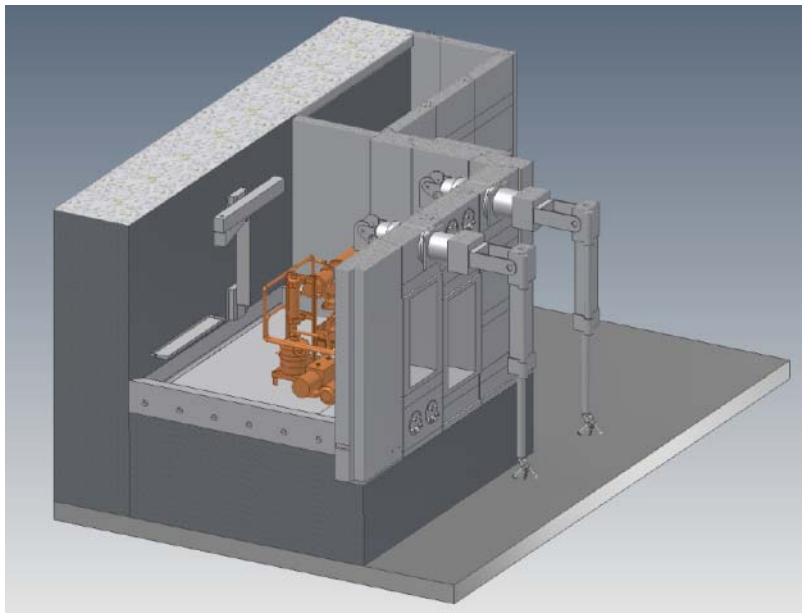

ATFE in Hot Cell

WFE Full-scale Development

- FY11 Scope – Test full-scale system components
  - 50 ft^2 HTA = Condensate production of nominal 2.52 gpm (21 lbs/min)
  - Test with DST simulants
  - Parameter optimization and off-normal event testing
- Maximize test platform fidelity
- Design and procure equipment for potential deployment usage
- Expand development integrated project team with RadCon and ALARA operations personnel

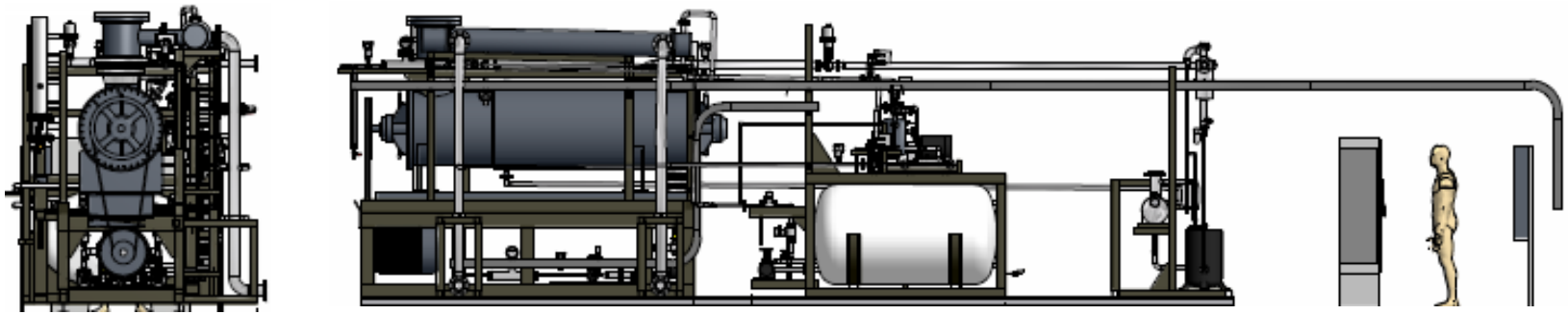

Test Platform Primary Equipment

WFE Deployment Plan

- Perform DOE Order 413.3 Protocols to obtain TRL 9
  - Use Critical Decision process
  - Perform WFE and tank farm interface design with Development Phase results and lessons learned
  - Complete safety analyses and environmental permitting
  - Conduct full-scale deployed system cold testing off-site; include mobility evaluation
- Conduct formal Technology Readiness Assessment
- Determine initial hot start tank
- Test actual waste samples in ATFE of selected tank(s) for pre-campaign analysis

Typical Modular Approach

WFE Deployment Opportunities & Challenges

- Accelerate deployment phase for insertion point of FY15
- Exploring use of eductor for WFE module pumping
  - Minimize operating systems
- Confinement and ALARA for modular/mobile systems
  - Multiple hazards analyses during development
  - Minimize modules located within tank farm
  - Apply concepts learned from retrievals
- Tank Chemistry Effects
- ATFE verification with actual tank waste
- Design and testing considerations to reduce impacts from simultaneous retrieval and concentrate return

WFE Mobile Concept

Contacts

For Further Information on…	Please Contact
DOE-ORP RA Program	Tom Fletcher, ORP, Federal Project Dir.
WFE DOE-ORP Management	Jeremy Johnson, ORP, WFE Tech. Lead
WRPS RA Program	Karen Vacca, WRPS, RA Project Mgr.
WFE & ATFE Project	Rick Tedeschi, WRPS, Project Mgr.
ATFE Laboratory Deployment	Whitney Dobson, WRPS, Lead Eng.
WFE Pilot-scale Testing	John Corbett, WRPS, Test Director
WFE Pilot-scale Application	Rob Wilson, Columbia Energy & Environmental Services, Project Mgr.

Thank you! Questions?

Print Close