SRNL™
SAVANNAH RIVER NATIONAL LABORATORY
Operated by Savannah River Nuclear Solutions, LLC
We Put Science To Work

SpinTek™ filtration

EM Rotary Filter Program

D.T. Herman
M.R. Poirier
S.D. Fink
F.M. Pennebaker

11/16/10

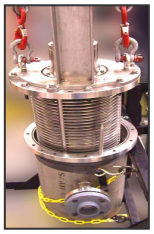

EM Waste Processing Technical Exchange 2010

SRNL-L3100-2010-00228

EM Office of Environmental Management
safety ❖ performance ❖ cleanup ❖ closure

Print

Close

Drivers

Identify and develop a solid-liquid separation technology with a higher filter flux per unit surface area to increase throughput and complete treating the waste stream in a shorter time, with a significant reduction in life-cycle cost.

- Take advantage of existing facilities
- Must not negatively impact downstream processes
- Must be able to integrate into existing systems
- Must not introduce new hazards/criticality concerns

A research program was conducted to identify and evaluate technologies for solids removal from liquid streams for the DOE Complex

Applicability

Apply the same technology to multiple streams at multiple DOE sites:

- **Wastewater**
- **Low Level Waste**
- **High Level Waste**
  - Small Column Ion Exchange (SCIX)
  - Sludge Washing

Evaluation of Technologies

Technology	Filter Pore Size	Manufacturer
Ceramic Microfilter	0.2 µ	Millipore
Centrifugal Ultrafilter	50,000 NMWC	SpinTek
Tubular Polymeric Ultrafilter	100,000 NMWC	Koch
Deep Bed Filter	N/A Treatment	Culligan Water
Backwashable Cartridge Filter	1.0 µ	Pall Corporation
Porous Metal Filter	5.0 µ	Pall Corporation
Stainless Steel Mesh Filter	0.5 µ	FUJI America, Inc.
Tubular Fabric Filter	3.0 µ	Ronninger-Petter
Centrifuge	N/A	Alfa-Laval Company

"The centrifugal ultrafilter produced the best improvement, reducing the turbidity below 1 NTU while maintaining over 90% of the initial filtrate flow."

The SpinTek Rotary Microfilter

- 1 - 25 filter disks
- ~11 inch diameter
  ~1 sq ft filter media per disk
- Rotate @ 1170 rpm
- 60 ft/s tip speed
- Typically run at 40 psi pressure drop across filter
- Patents owned by SpinTek

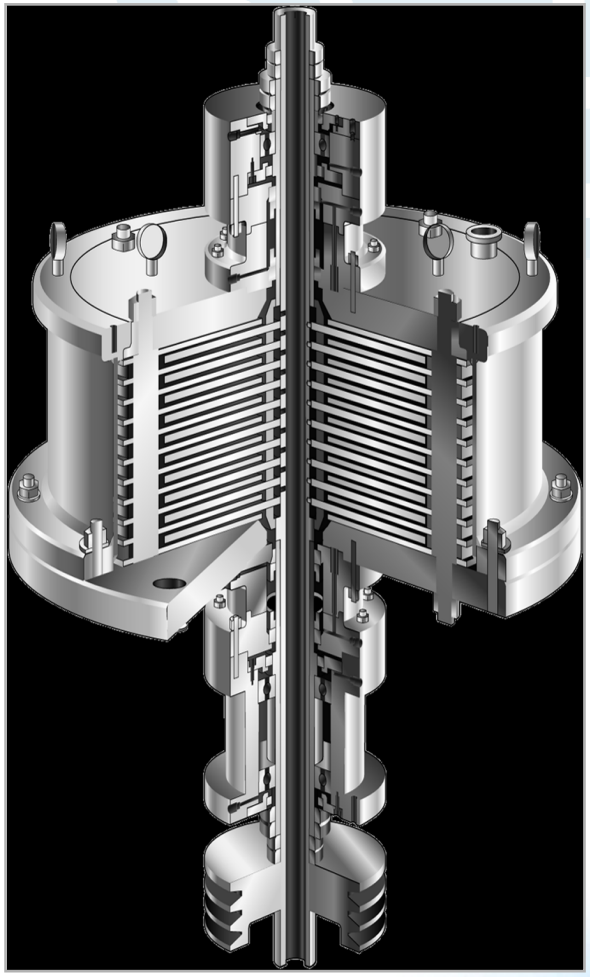

The SpinTek Rotary Microfilter – (continued)

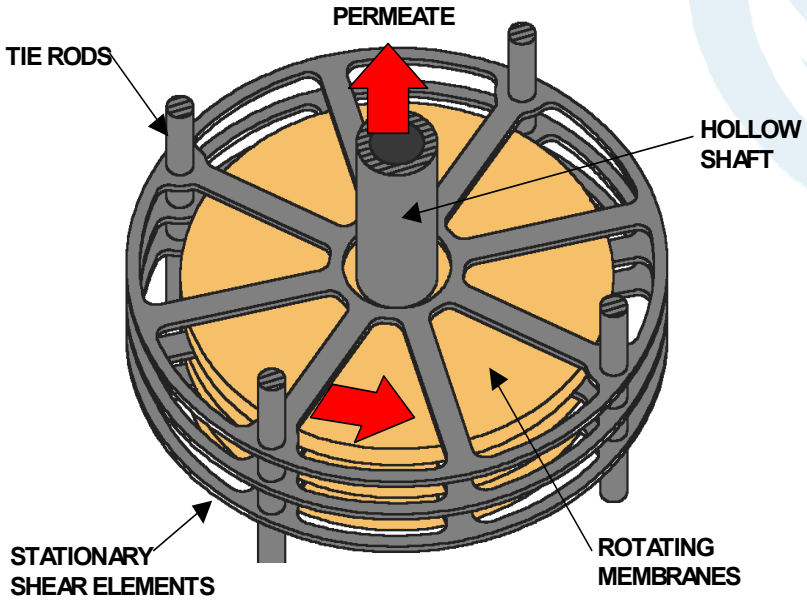

- Pressure applied in the filter tank
- Permeate flows into the disk, through the hollow shaft and out the filter
- Turbulence promoters / baffles above and below disks increase shear at the membrane surface and reduce cake buildup
- Concentrated feed exits the filter
- Up to 10 times filtration rate of crossflow filters

Full Scale Filter Modifications for Radioactive Service

Commercial off-the-shelf design less than ideal for radioactive service

- Large number of small parts
- Extensive use of polymers in design.

Received funding from DOE (then) EM-21 to develop the technology for radioactive service

Design modified to make more reliable in radioactive service

- Materials of construction and joining
- Fabrication tolerances
- Consolidation of internal parts

Reconfigured design to allow removal of entire stack of filter disks and all wear parts as a single piece

Welded all stainless steel filter disk

DOE/SRNL has received a Patent on design improvements and licensed the improvements with SpinTek

From SpinTek filter user's manual

Rotary Filter Historical Testing Summary

SpinTek FETC Testing ('99)

Vendor Testing for SRS ('01)

Procured 1-Disk rotary filter for actual waste testing ('02)

- **SRS Actual Waste+MST, Actual Waste+Permanganate**

Conducted project to procure and test 3-disk pilot scale rotary filter

- **Installed at FRED Facility USC** ('02-'05)
  - SRS simulants, SRS simulants+MST, SRS simulants+permanganate
  - 4500 hour total run time
  - 1000 hour continuous test
- **Moved to SRNL** ('05-'07)
  - Membrane testing (0.1, 0.5, 1.0 micron filter Pall Membrane)
  - Sludge washing SRS Sludge Batch 4 simulants

Actual Waste Testing Results – Single Disk Filter

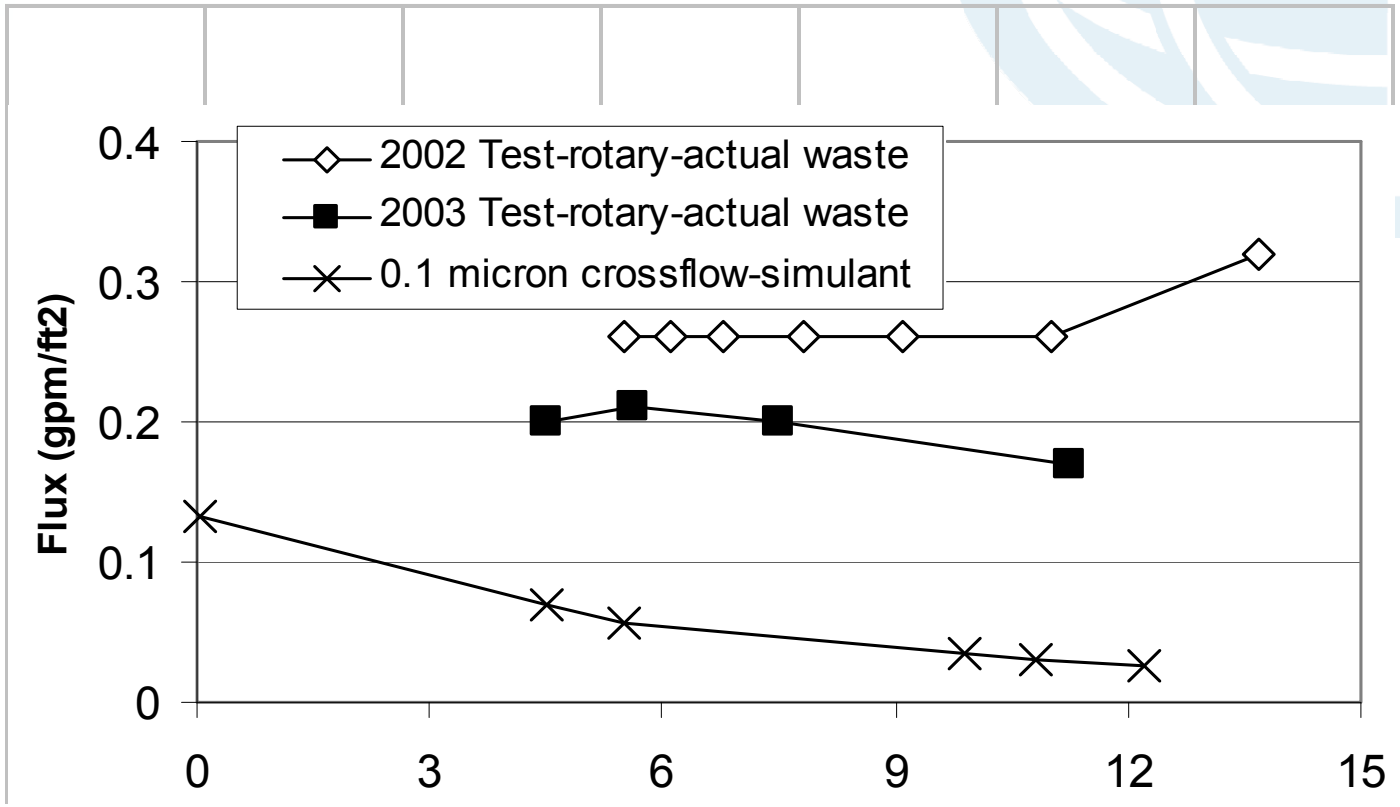

Rotary filter testing showed a significant increase in flux versus a crossflow filter.

Rotary Filter Testing Summary (cont.)

Procured 2 X 25-Disk full scale rotary filters with updated design for DOE applications (SCIX with ORNL) ('05-'08)

- **Installed one filter - ~500 hours total run time**
  - SRS simulant, Hanford simulant, SRS simulant + MST
  - Pre-filter and sludge washing

Single disk testing on Hanford actual waste ('09 – Heinz Huber, WRPS)

- **AN 105 Composite**
- **SST Composite**

1000 hour endurance test – 25 disk rotary filter (October '10)

- **2nd Generation filter**
- **SRS SB6 simulant**
- **Sludge Washing**

SRS Rotary Filters

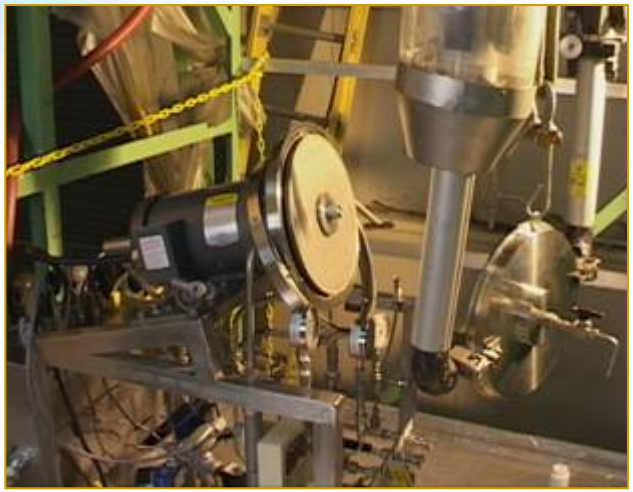

Single Disk
Actual Waste Testing

3-Disk Pilot-Scale
Simulant Testing

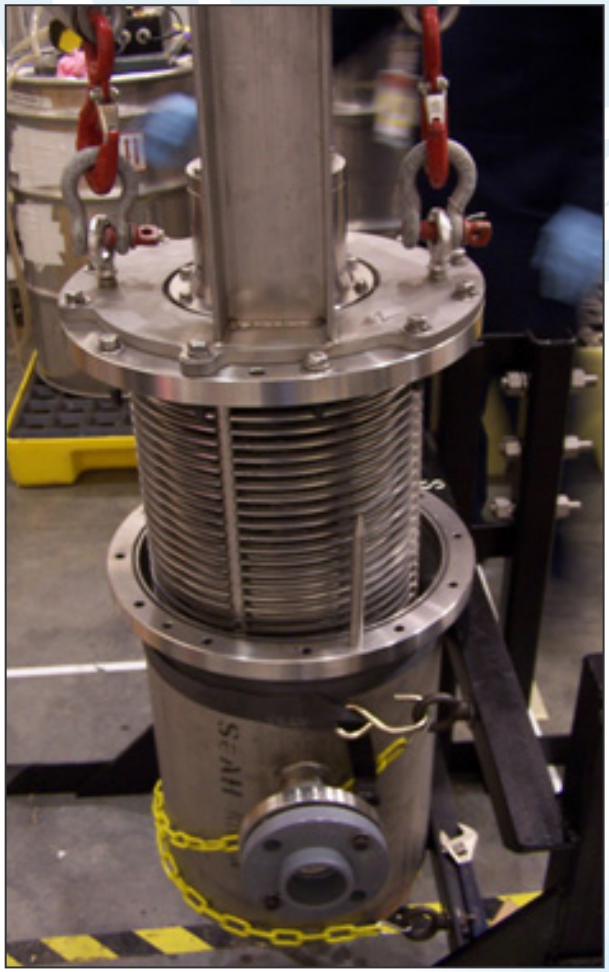

1st Generation 25-Disk
Full-Scale Simulant Testing

SRNL™

SpinTek™ filtration

EM Office of Environmental Management
safety ❖ performance ❖ cleanup ❖ closure

Small Column Ion Exchange '05 Pump/Filter Module

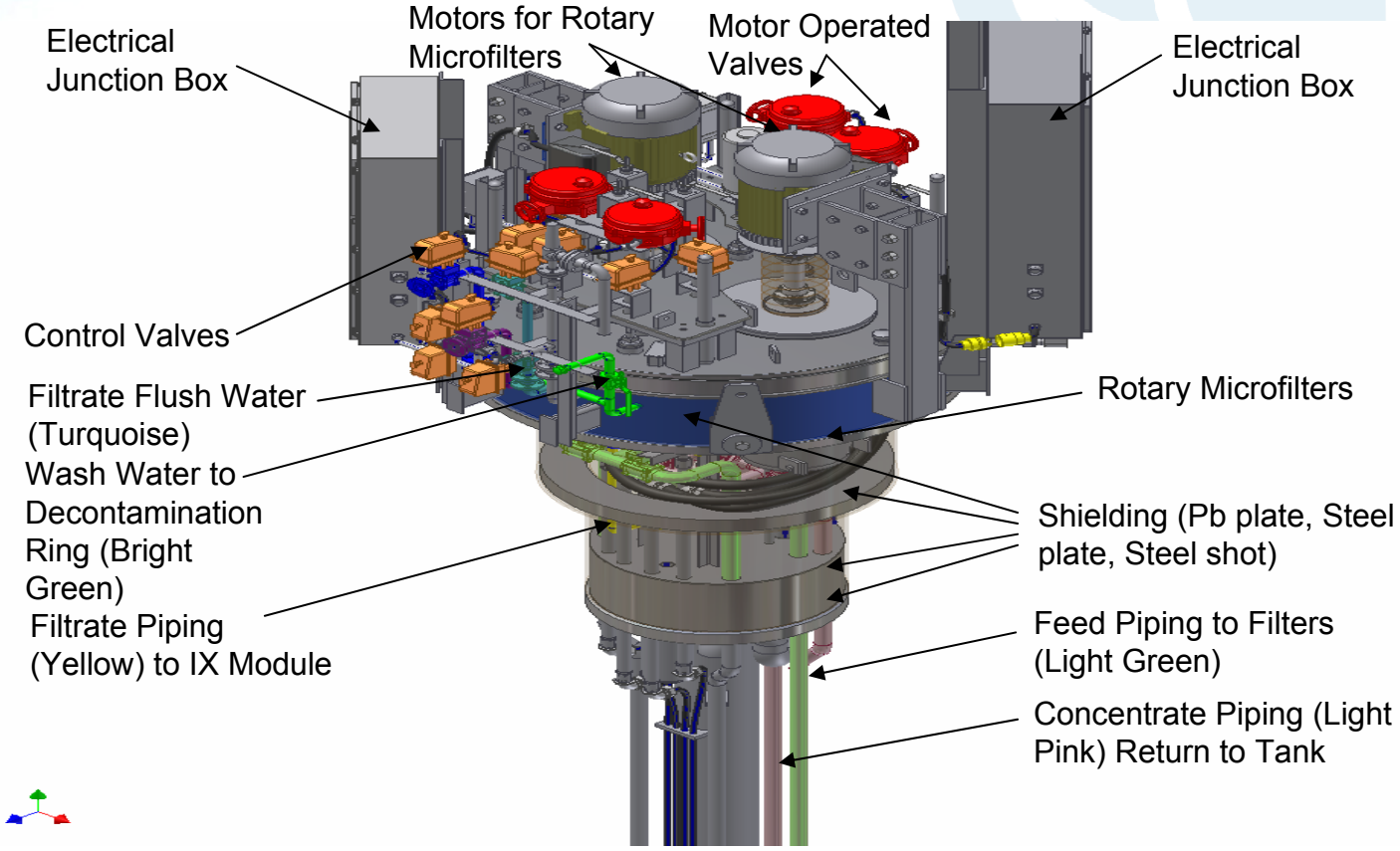

EM funded a task that successfully demonstrated the feasibility of in-tank applications.

Design of the 2nd Generation 25-Disk Rotary Filter

EM supported the continued development on the rotary filter for Sludge Washing as well as SCIX. Based on the performance during full scale testing, several improvements were implemented:

- Improved cooling to the internal journal bearing
- Improved mating of stack to filter tank
- Better tolerances for filter disks and center hubs to reduce vibration
- Use of commercial non-contact air seal
- Reduced internal restrictions

Same filter design supports multiple applications

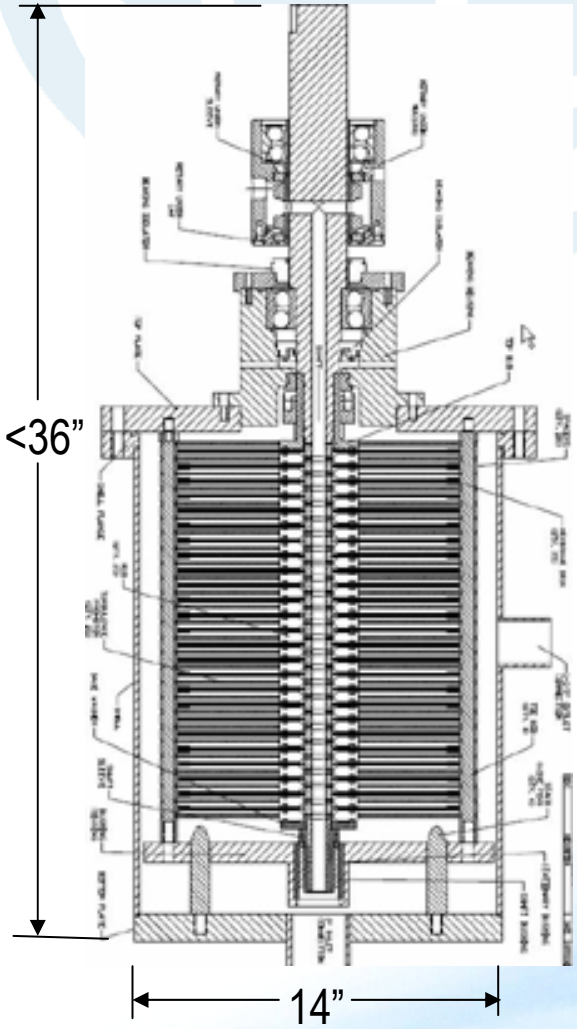

1000 Hour Test

The purpose of the test was to demonstrate the use of the rotary filter for sludge washing and provide a long term test for filter components.

- **Conducted at the vendor's facility**
- **All Testing completed October 2010**
- **SRS Sludge Batch 6 recipe**
  - Slow settling
  - Low mean particle size
- **3 sludge loadings – 5, 10, 15 wt %**
- **After 1000 hours complete, wash sludge to <1M Na (initially 5.6M)**

The prior work and the 1000 hour test supports the development of the technology for deployment.

Savannah River Remediation

We do the right thing.

Small Column Ion Exchange (SCIX) (1st Planned RMF Deployment)

Date: November 16, 2010

Presenter:
Richard Edwards, SCIX Engineering Manager

SRR-SCIX-2010-00052

Small Column Ion Exchange (SCIX)

- SCIX Process Mission
- Technology Application
- RMF Application
- Technology Integration Approach
- Current Status and Schedule

SCIX Process Mission

SCIX Process Mission

- Provide Supplemental Salt Processing Capability (2.5 MGal/yr)
  - Equivalent DSS Product
  - Integrated with Existing Operating Facilities
    - DWPF
    - Saltstone
- Leverage Multiple EM Technology Developments & SRR Equipment Developments to optimize efficiency of tank waste treatment
  - No major infrastructure investments with significant life-cycle savings

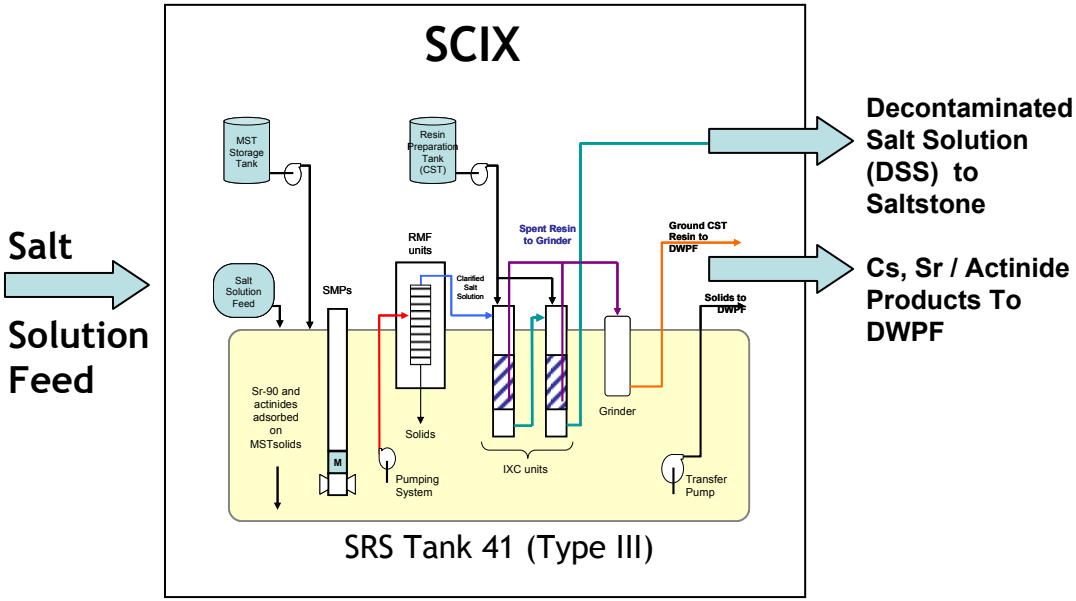

Apply Mature Technology

Rotary Microfiltration

MST Treatment

Ion Exchange

In-Tank Design Feasibility

Submersible Mixer Pumps

Immersion Mill Grinder

1st RMF Deployment: Small Column Ion Exchange (SCIX)

- Technology
- Rotary Microfilter is key in-tank liquid/solids separation step for SCIX process
  - Filter to remove sludge/MST prior to Ion Exchange (IX)
  - Good Performance / footprint ratio supports in-tank application

- SCIX Filtration Processing Module will contain 4 Rotary Microfilters

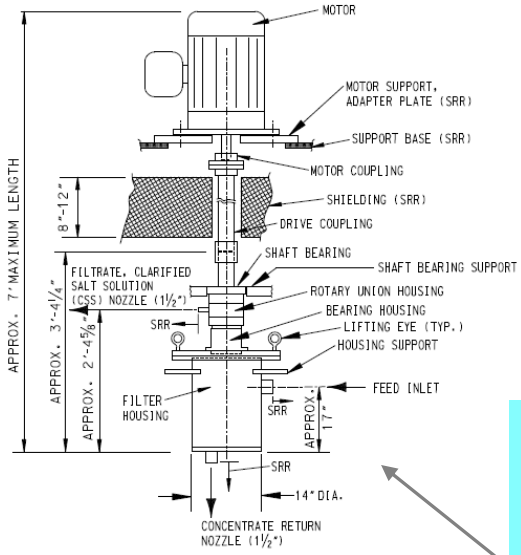

SRR Conceptual Design

Rotary Microfilters

SRNL SpinTekfiltration

CONCEPTUAL DESIGN PACKAGE
M-DCP-H-00044 REV. A
SMALL COLUMN ION EXCHANGE PROGRAM
ROTARY MICROFILTER COMPONENT
STRUCTURAL STEEL
RMF MODULE INTERNAL FRAME
ISO w/ PIPING AND EQUIPMENT
C-CS-H-SK011
SHEET 1 OF 4

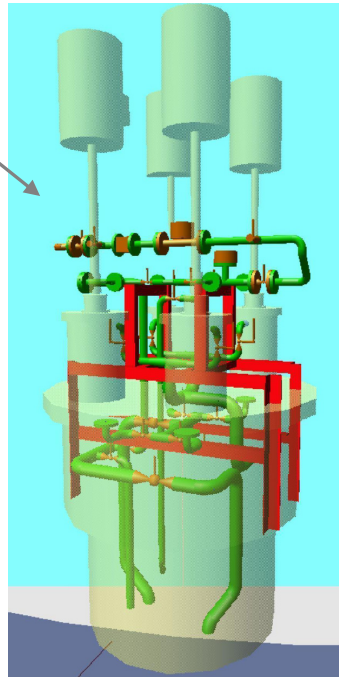

Small Column Ion Exchange (SCIX)

- Technology Integration Approach
- Deliberate staged approach to assess technology deployment
  - Program conducted Technology Readiness Assessment
    - Key technology agency input
    - Approach reviewed by external DOE team
  - Identify gaps & strategy
    - Issued Technology Maturation Plan
- Remaining technology effort is now deployment specific (SRS Tank 41)
  - Integrated into Implementation Schedule with TRL milestones
  - Guided by SCIX Technology Maturation Plan (RMF is 1 of 4 critical technologies for SCIX)
  - Supports Hazard Analysis (DOE Order 1189), design inputs, operating strategies, integration with existing processes (DWPF & Saltstone)
- Integrated with Hanford Site

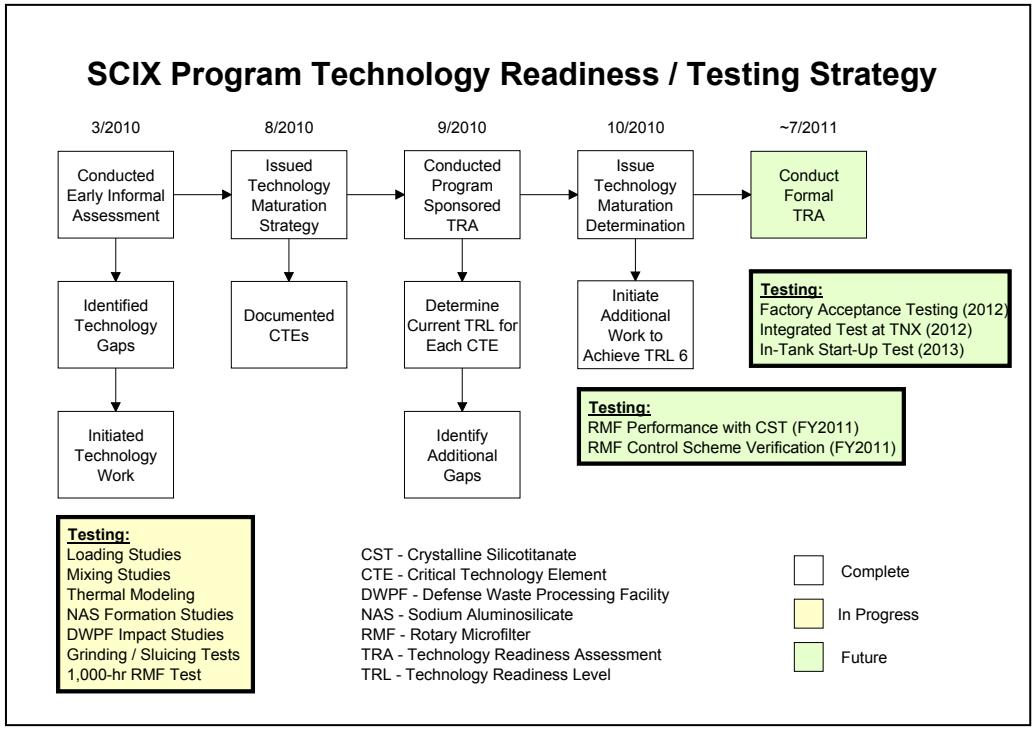

Small Column Ion Exchange (SCIX)

- Current Status
- Conceptual Design – Formal Design Review Complete (11/11/2010)
- Initiating long lead non-safety procurements
  - Standard Waste Removal Equipment (SMP's / STP's)
  - 1st lot of 4 RMF's
  - 1st Batch of CST Ion Exchange Resin

SCIX Conceptual Design

Conceptual Design Packages

1. Conceptual Design Package For Small Column Ion Exchange Program Project ID: SCIX Rotary Microfilter Component
2. Conceptual Design Package For Ion Exchange Column Component
3. Conceptual Design Package For Spent Resin Disposal Component
4. Conceptual Design Package For SCIX Spent Resin Disposal Component
5. Conceptual Design Package For Overhead Truss System Component

Engineering Execution Plan (EEP)

Technical Requirements and Criteria(TR&C)

Process Flow Diagram (PFD)

Technology Maturation Plan

Safety Basis Development

Interface Control Document

Configuration Management Plan

Operations Strategy

Maintenance Strategy

.
.
.

Small Column Ion Exchange (SCIX) Program Planning Schedule

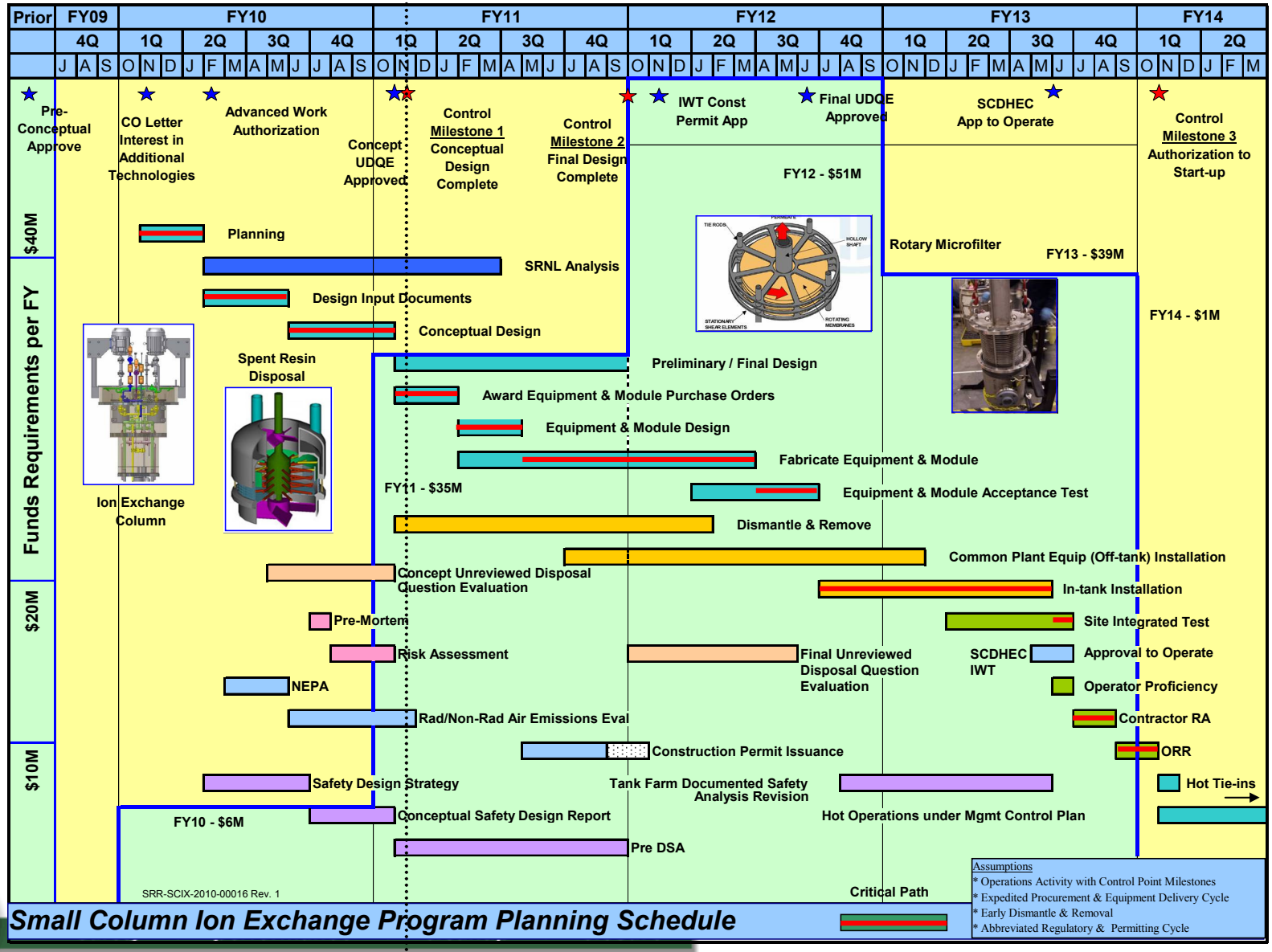

November 2010

Print

Close