Technology Design

The ITSM consists of two Coriolis meters that are used in unison to determine the solids weight percent of a slurry solution. One Coriolis meter is used to measure the density of the slurry, while the other meter is used to measure the density of the carrier fluid. A sample of carrier fluid is obtained by filtration of the slurry using a cross-flow filter. The suspended solids concentration is then calculated from the density relationships between the slurry, the carrier fluid, and the dry solid particles using the following equation:

$$\boldsymbol{Wt\% = 100 \times \frac{\rho_s(\rho_{sl} - \rho_f)}{\rho_{sl}(\rho_s - \rho_f)}}$$

Wt% = Weight percent of undissolved solids in the slurry

ρ_s = Density of the dried undissolved solids

ρ_{sl} = Density of the slurry

ρ_f = Density of the filtrate

It is capable of providing online, real-time measurement of particulate concentrations within the tanks in liquid-solid slurries, despite dynamic disturbances from ongoing mixing. The process flow is contained within a sampling pod that is lowered into the tank. It can be deployed through an 8” riser, and includes a locking mechanism to maintain the system retracted within the riser.

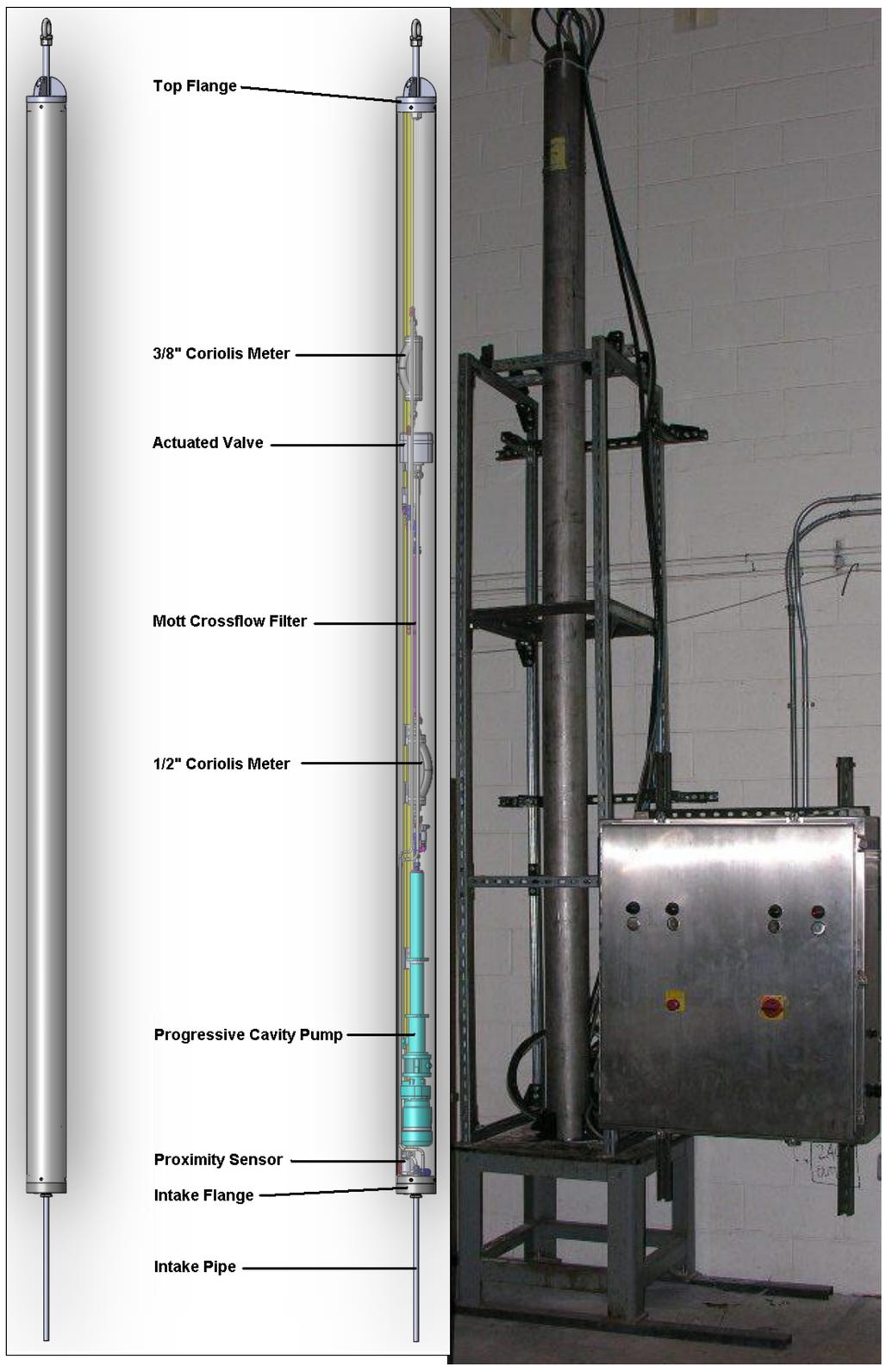

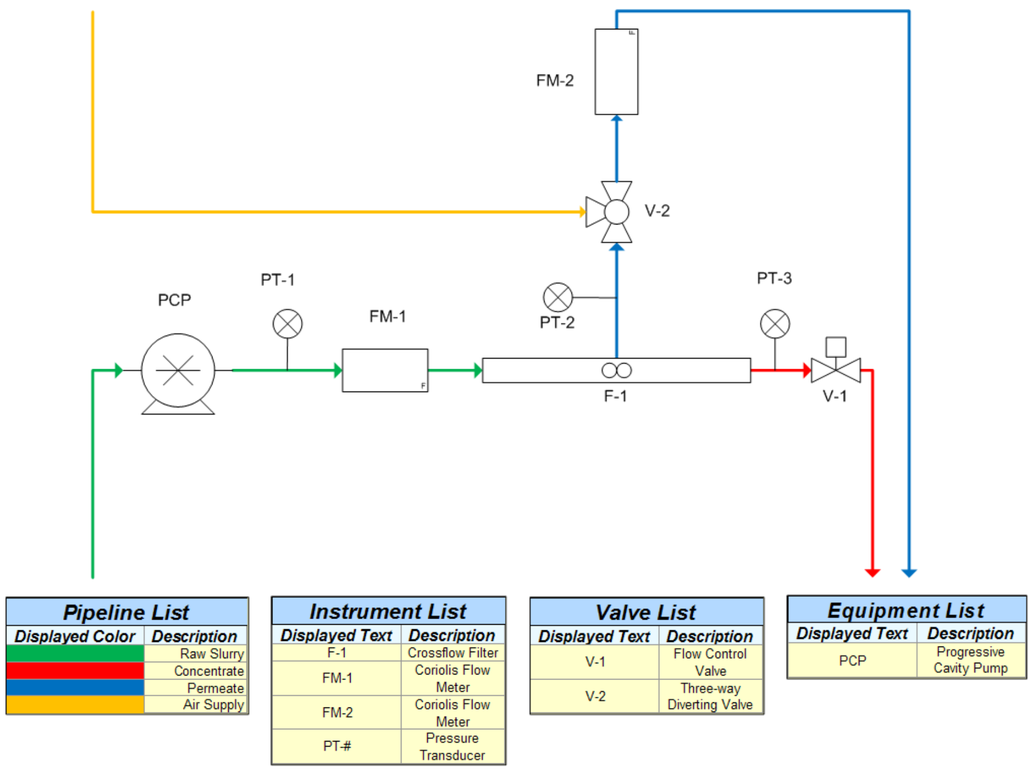

ITSM Process Diagram

The ITSM is controlled by a CompactRIO system from National Instruments®

arc applied research center
FLORIDA INTERNATIONAL UNIVERSITY

FIU

Print

Close

In-Tank Solids Monitor (ITSM)

Awwad, A., Crespo, J., Varona, J., McDaniel, D., Roelant, D.

Florida International University's Applied Research Center (ARC)

Abstract

FIU's Applied Research Center (ARC) is supporting the U.S. Department of Energy's Office of River Protection in its mission to facilitate the retrieval and treatment of high-level radioactive waste stored in underground, tanks at the Hanford site. The ability to continuously monitor the solids weight percent of mixed slurries in these tanks remains a critical technology gap. ARC is assisting the Hanford Tank Farm Operators by systems integration of dual Coriolis meters in a tank deployable configuration for near real time measurement during mixing operations.

System Specifications

- System has been designed with parameters compatible with Hanford Site slurry.
- System can withstand exposure to both high-level radiation and caustic solution.
- System is deployable through an 8-inch riser at the top of the tank.
- Continuous measurement of solid weight percents despite dynamic disturbances.
- Provide system containment from outside environment.
- System has a suspended solids concentration accuracy of ±1% by weight.
- System is designed to operate under the following conditions:

Particle Size	0.7-700	um
Viscosity	1.0-5.0	cP
Percent Solids	≤18	Wt%
Temperature	50-250	F
Specific Gravity	1.0-2.0	-
pH	≥9	-

Benefits

- Improved HLW retrieval efficiency
- Improved understanding of solids with all HLW transfers
- Minimization of technical and schedule risks

arc applied research center
FLORIDA INTERNATIONAL UNIVERSITY

FIU

Print

Close

Technology Testing

Steady State Slurry

- Steady state slurry experiments were conducted on 15 gallons of slurry in a 30 gallon container
- Mixture of sodium nitrate ($NaNO_3$) and water
- Glass beads with an average particle size of 53 micron were added to create ratios of 1, 5, 10, 15 and 18 weight percent solids
- Grab samples were taken at the same location as the inlet of the ITSM's pickup tube for comparison

Steady State Data

Wt% of Sample	ITSM Average WT% Reading	Offset
0.909	*1.191*	**0.282**
4.575	*4.371*	**-0.203**
9.142	*8.434*	**-0.708**
13.997	*13.367*	**-0.630**
16.722	*16.670*	**-0.051**

Unsteady State Slurry

- Determine the dynamic response time to changes in solid weight-percent and carrier fluid by imposing step changes
- The slurry had an initial weight percent solids concentration of 4.85% solids.
- Glass beads were added increasing the concentration to 14.36% solids.
- After 5 minutes, 3 gallons of water were added to diluting the mixture to 12.4% solids.
- ITSM has an average response lag of 30 seconds.
  - Due to the time required by the filtrate reach the filtrate coriolis meter.

Unsteady State Data

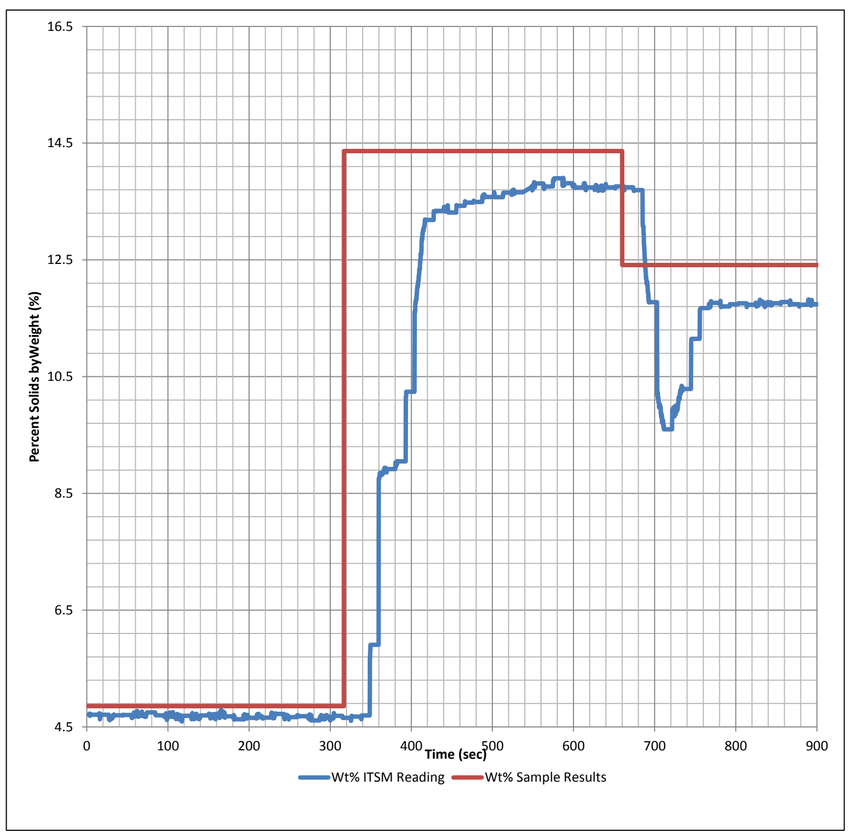

arc applied research center
FLORIDA INTERNATIONAL UNIVERSITY

FIU

Print

Close