Low Level Mixing in Waste Tanks

T. B. Caldwell
T. M. Punch
Technology Development Engineering
Liquid Waste Operations
Washington Savannah River Company
Savannah River Site

Office of Waste Processing Technical Exchange
May 19-21, 2009 Denver, Colorado

low level mixing is needed

- Enhanced Chemical Cleaning (ECC) requires a relatively small amount of acid [Ref. 1]
  - short residence times; discourages re-precipitation of oxalates
  - material at risk as small as possible

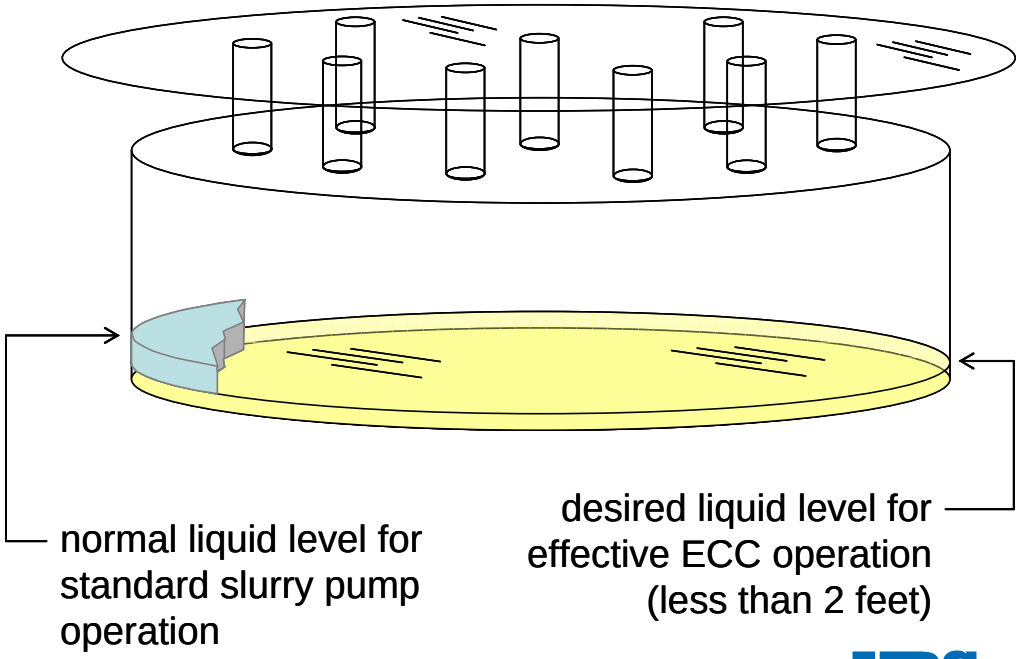

the key ingredient of ECC

- oxalic acid
  - cleans stainless steel cooking surfaces, radiators
  - used in wood restorers
  - used in dyeing and tanning processes

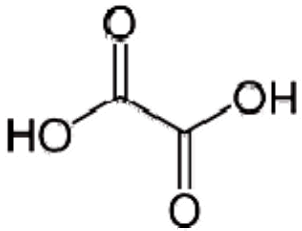

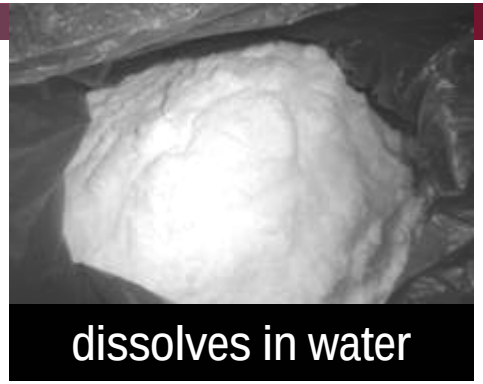

- oxalic acid performs two functions in removing waste [Ref. 2]
  - solvent – dissolves oxides and hydroxides as an acid
  - dispersant – reduces particle size thereby promoting easy suspension and transport

flow requirements of ECC

- mixing objectives
  - liquid phase homogeneity
  - maximum acid strength in contact with solids materials
  - encourage convective transport
  - whisk away small particles
- mixing requirements
  - some tests suggest a flow field $\boldsymbol{v}$ >0.2 feet per second (experience suggests mixing is beneficial, though exact flow requirement is being investigated) [Ref. 3, 4, 5]

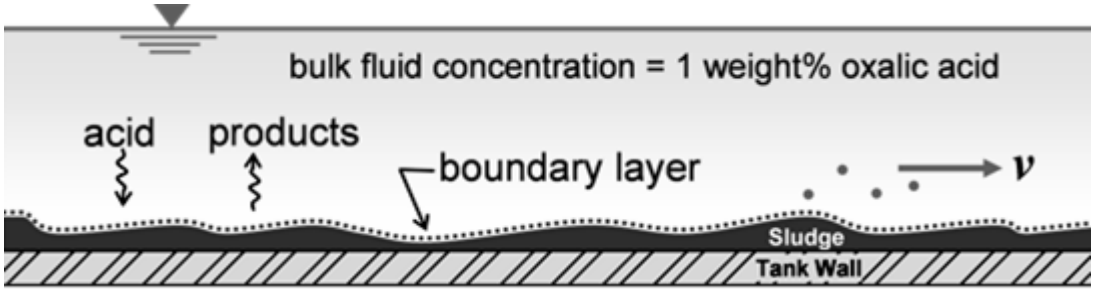

mixer requirements and attributes

- mixer to interleave into existing program and systems [Ref. 1]
  - use existing risers
- desired mixer attributes
  - re-use equipment consider
  - multi-purpose equipment
  - consider off-the-shelf mixers
  - consider technology development initiatives by DOE

turbulent free jet at low liquid levels

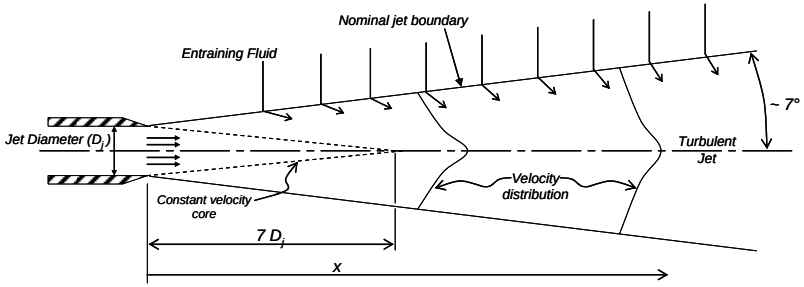

typical submerged turbulent free jet

[Ref. 7]

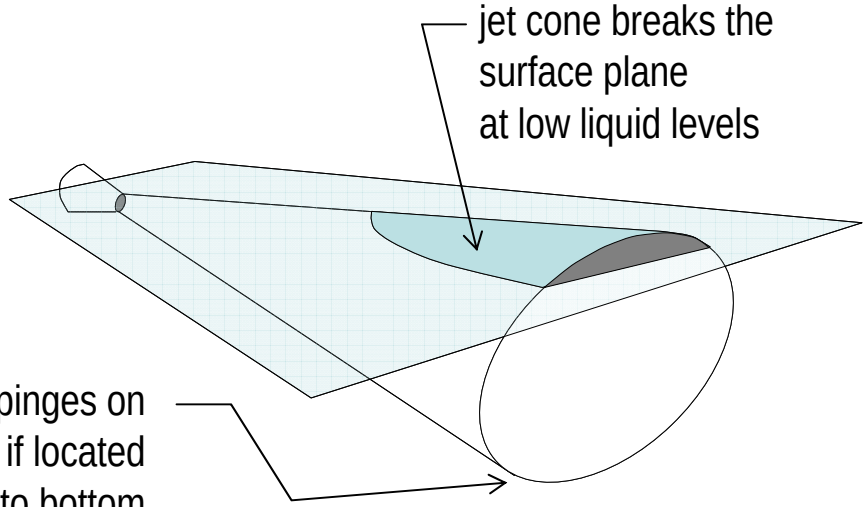

CFD computer programs vary in the way liquid surface and tank bottom interface is modeled

free surface is FIXED

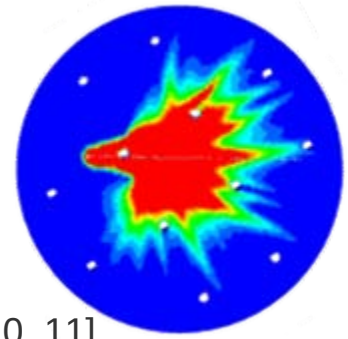

[Ref. 10, 11]

free surface is OPEN

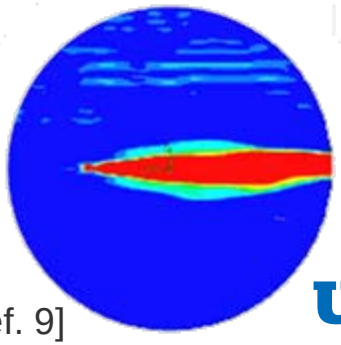

[Ref. 9]

three options for ECC

slurry pump
(existing technology)

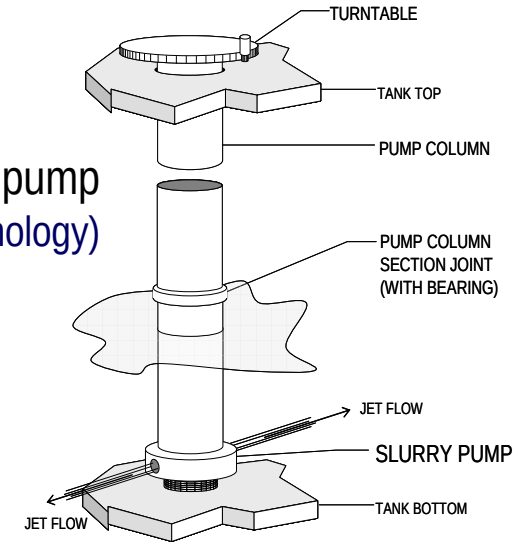

compact mixer
(by WSRC-LWO)

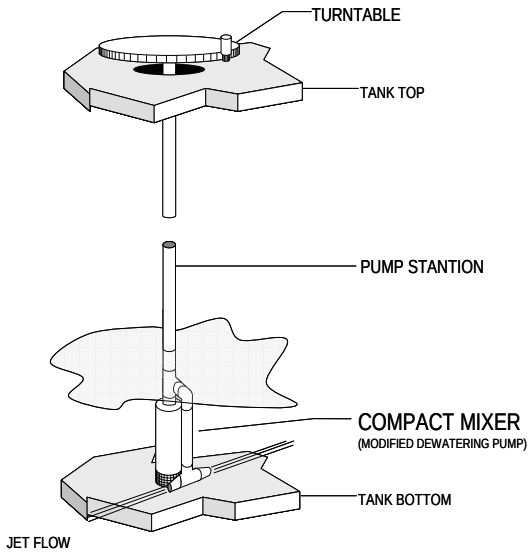

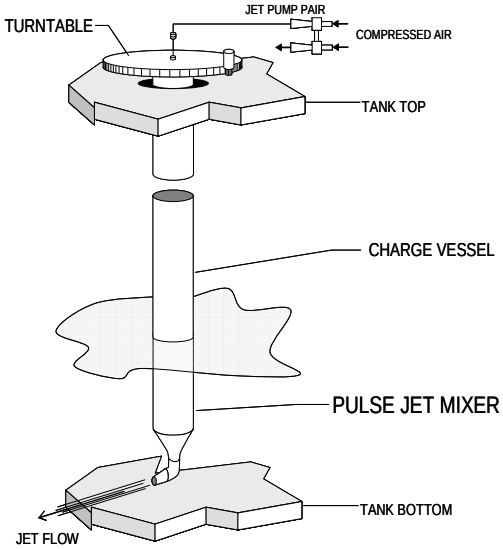

pulse tube mixer
(being developed by
NuVision Engineering)

the compact mixer

- the “compact mixer” being developed by WSRC LWO
- design approach:
  - identify the largest pump that could fit through a 2-foot riser
  - use a pump capable of pumping at low liquid levels without priming
  - size the nozzles to achieve the largest *UoD* coefficient
  - can be modified to rotate or sweep the jet spray

manufacturers/models considered

- double diaphragm or air-driven pump (Wilden, Sandpiper, etc.)

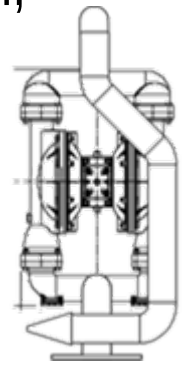

not selected because the largest pump could not produce the velocities required

- slim line sump (or well) pumps
  - Tsurumi
  - Mody
  - Gould
  - Bibo

largest pump within the size and pumping level constraints (Model G1006 – 58HP – 700 gpm @ 180 ft)

the compact mixer – prototype design

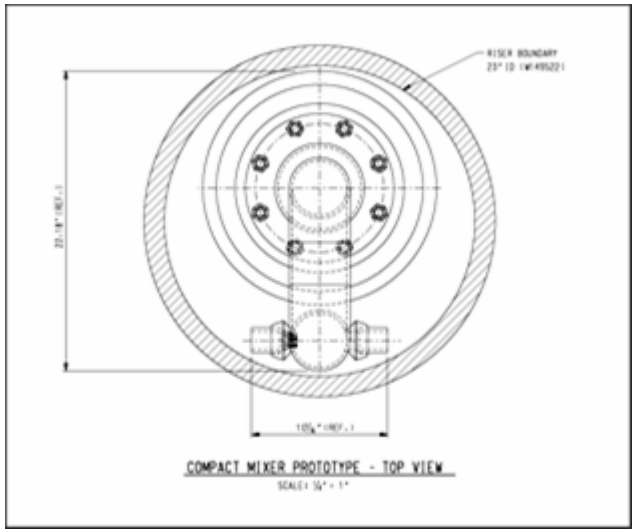

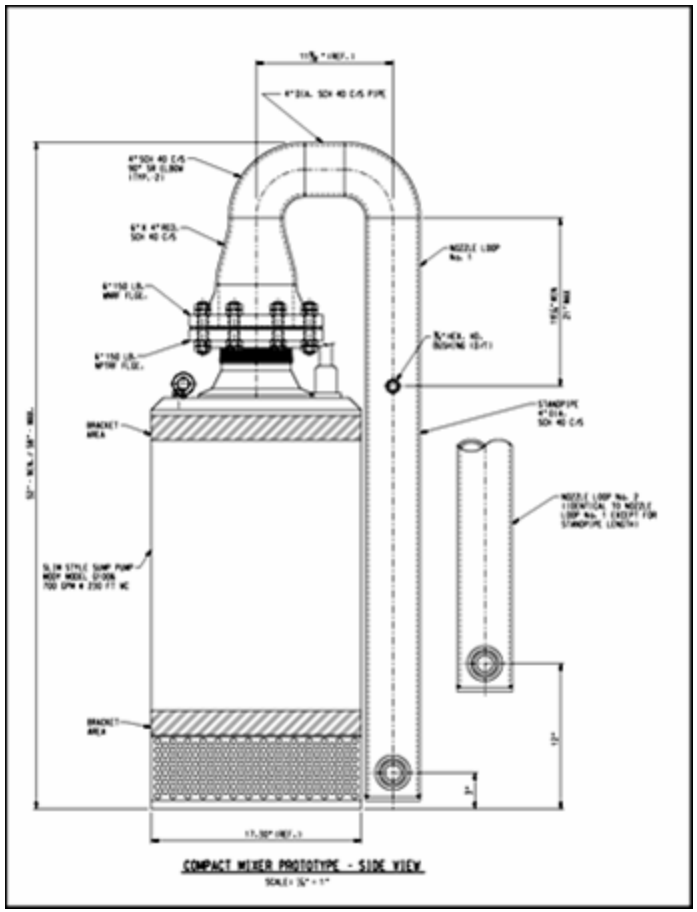

the compact mixer – nozzle design

Mody Model G1006

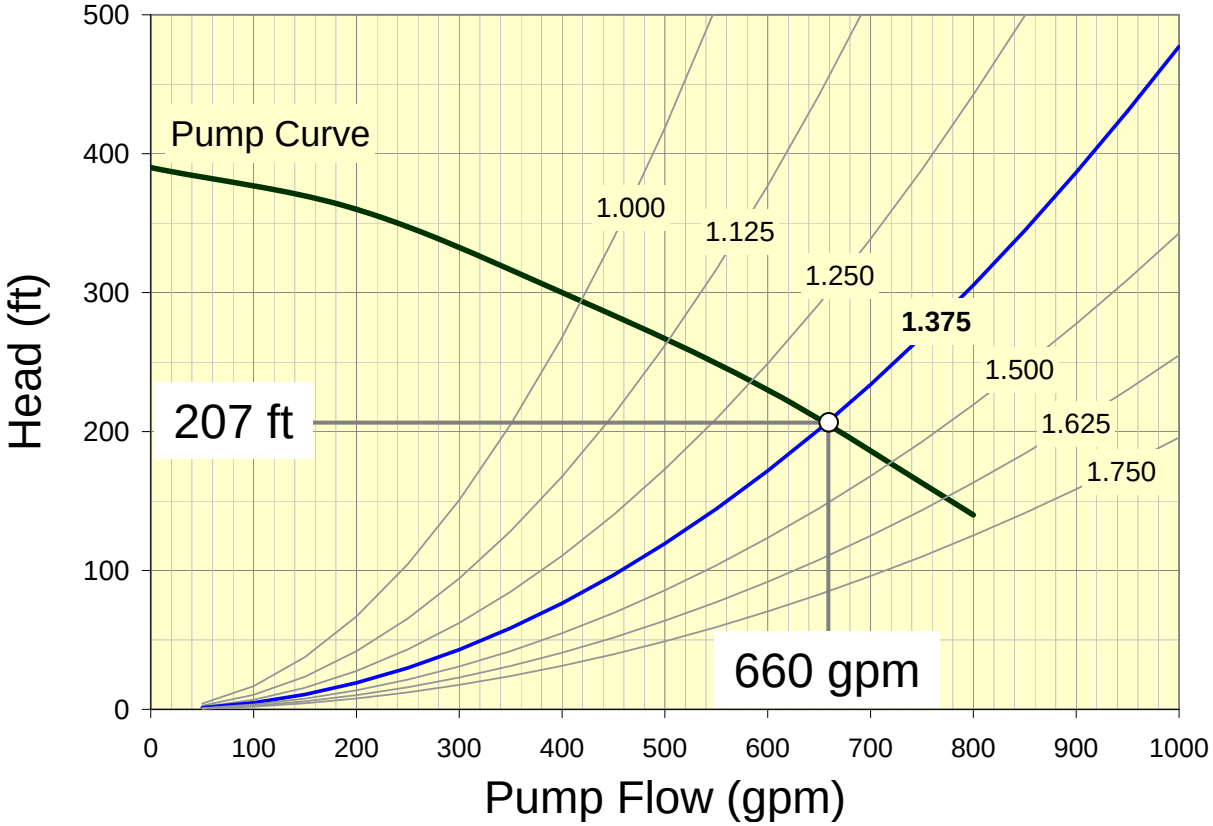

the compact mixer inside a Type I tank

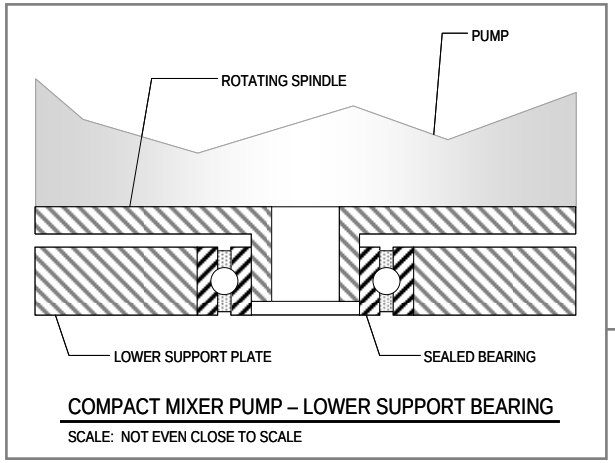

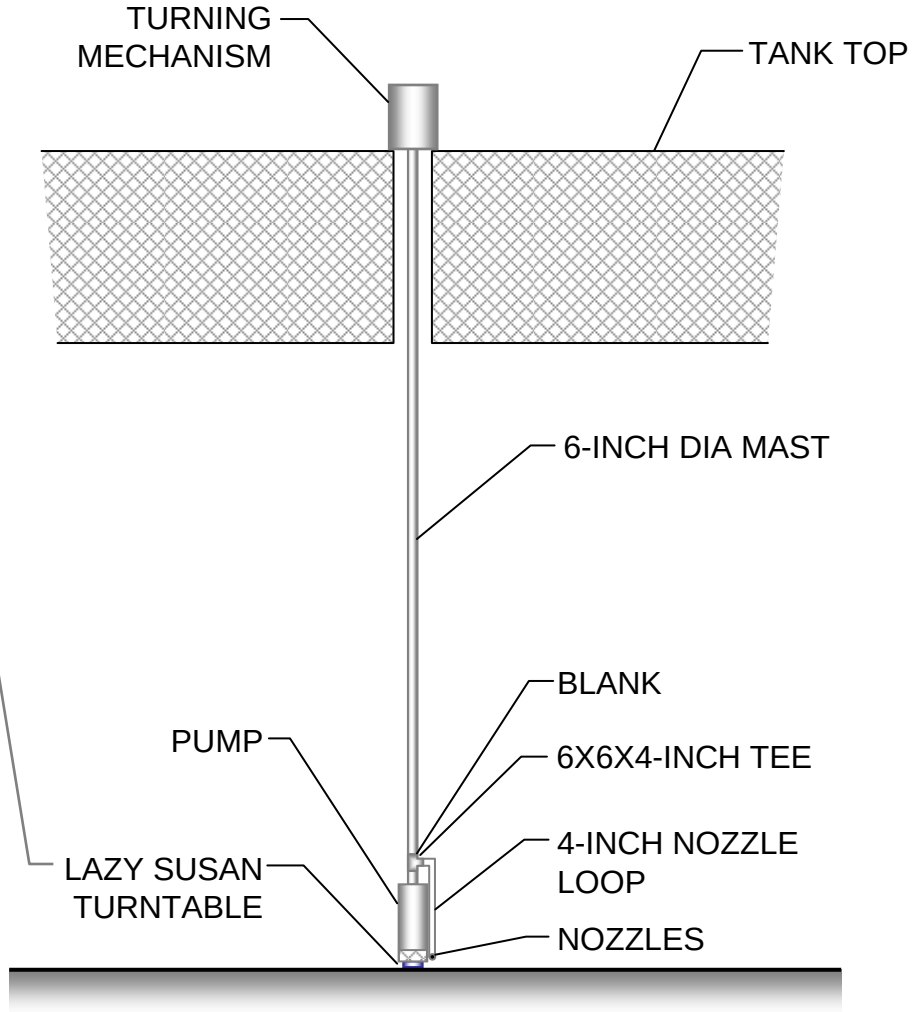

slurry pump versus the compact mixer

Mixer Option	Pump Flow (gpm)	Motor HP	TDH (ft)	Centerline Velocity @ 60 ft from Jet Exit	Hydraulic HP (SG = 1.1)	ECR
Slurry Pump (standard)	1200	150	185	0.48	62	32
Compact Mixer	660	58	207	0.37	38	19

- applications beyond ECC
- operate at very low tank liquid levels
- powered by a VFD for mixing variability
- compares favorably with the standard slurry pump for general mixing applications
  - provides economical option for spot slurrying
  - jets can be set at any elevation to “shoot” between (or under) coil fences

test objectives

- verify pump flow and pressures
- verify nozzle velocities
  - verify tank velocities at different levels
- determine pump stability
- determine low level pump capability and operating limits
  - vortex formation
  - rooster tail formation

references

1. Punch, T. M., "Task Requirements and Criteria - Enhanced Chemical Cleaning Project," U-TC-F-00002, Revision 1, May 22, 2008.
2. Bradley, R. F., Hill, A. J., "Chemical Dissolving of Sludge from a High Level Waste Tank at the Savannah River Plant," DP-1471, E. I. DuPont de Nemours and Company, Savannah River Laboratory, Aiken, South Carolina, November 1977.
3. Bechtold, D. B., et. al., "Laboratory Testing of Oxalic Acid Dissolution of Tank 241-C-106 Sludge," RPP-17158 (Rev. 0), Fluor Hanford, Richland, WA, July 10, 2003.
4. Karraker, D. G., "Solubility of U, Pu, Iron, and Manganese in Weak Nitric Acid and Concentrated Oxalic Acid Solutions: A Literature Survey," WSRC-RP-98-00091, March 5, 1998.
5. West, W. L., to Morris, O. M., Memorandum, "Tank 16 Water Wash and Chemical Cleaning Results," DPSP-80-17-23, E. I. DuPont de Nemours and Company, Savannah River Plant, Aiken, South Carolina, December 16, 1980.
6. Daily, J. W., Harleman, D. R. F., Fluid Dynamics, Addison-Wesley Publishing Co., Inc., 1966.
7. McCabe, W. L., Smith, J. C., Harriott, P., Unit Operations of Chemical Engineering, 4th Edition, McGraw-Hill Book Company, 1985.
8. Wu, T. T., "Calculations of Slurry Pump Jet Impingement Loads," WSRC-TR-96-0064, July 1996.
9. Nevins, P., "Enhanced Chemical Cleaning Interim Report – Initial Concept Description and Modeling," Document No. 2301-4-001 (Rev. 0), NuVision Engineering, Inc., Mooresville, NC, August 27, 2008.
10. Lee, S. Y., Dimenna, R. A., "Scoping Evaluation of Pump Mixing in Tank 42," WSRC-TR-2007-00157, April 2007.
11. Lee, S. Y., "Preliminary Results for Mixing Evaluation on a Type I Waste Tank," DRAFT Letter (unpublished), August 20, 2008.

contacts

Tommy Caldwell – Savannah River Site
Building 766-H
P. O. Box 616
Aiken, SC 29808
(803) 208-8430

Tim Punch – Savannah River Site
Building 766-H
P. O. Box 616
Aiken, SC 29808
(803) 208-8628