Overview of SRS Immobilization Process Issues, R&D, and Future Issues

Connie C. Herman
Savannah River National Laboratory
Savannah River Nuclear Solutions
John E. Occhipinti, John F. Iaukea, Aaron V. Staub
Defense Waste Processing Facility
Washington Savannah River Company

Office of Waste Processing Technical Exchange

May 19, 2009

Defense Waste Processing Facility (DWPF)

Mission is to immobilize HLW within the structure of borosilicate glass

- **Chemically bond radioactive species in the glass**

Started radioactive operations in 1996

Treating SRS's 38 million gallons of HLW

DWPF Baseline Processing Assumptions

Criteria	*Before Start-up*
Sludge Composition	Tank blending to mitigate compositional extremes
Salt Process	In tank precipitation
Al Dissolution	Perform on select tanks to reduce Al in glass
Rheology Controls	Function of total solids for all sludge types
Wash Endpoint	Nominally 0.5 M Na
Batch Size	1 million gallons
Preparation/ Feed Tanks	Prepare and feed from Tanks 40 or 51
Chemical Process Acid Strategy	Add nitric acid to balance formate in salt stream
Frit Composition	202 for coupled processing

Once cold runs were completed, process changes implemented

- **Abandoned Al dissolution with assumption that blending could mitigate high Al sludge scenarios**
- **Salt processing facility not ready so started in sludge-only mode**
  - Introduced formic/nitric acid flowsheet to balance redox
  - Change to frit 200 to accommodate reduced alkali

DWPF Initial Challenges & Processing Issues

Sludge physical property issues hampered processing

- **Tacky and adhesive sludge properties for Sludge Batch 1b**
  - Analytical challenge
- **Pumping problems during Sludge Batch 2**
  - Evidence of air entrainment and high yield stress in sludge which was alleviated through acid addition
- **Foaming problems during chemical processing**
  - Developed and implemented IIT 747 to mitigate

Slow melter throughput with unsteady cold cap

- **Melter and offgas surges**

Melter drain pluggages

- **Degraded performance after start of radioactive operations**

Challenge to Increase Waste Throughput

In 2002, implemented initiatives to accelerate closure of the Tank Farm and DWPF

Process Faster → <u>Increase Melt Rate</u>

- **Produce more canisters per year**
- **Reduce production time and mission cost**

Make Fewer DWPF cans → <u>Increase Waste Loading</u>

- **Produce less canisters containing more waste**
- **Reduce production time and mission cost**
- **Reduce canister storage and disposition cost**

Higher waste throughput ultimately reduces the total number of years the HLW system is operated (significant cost avoidance)

Waste Stream Changes

Sludge washing endpoint targets required modification

- **Disposition of excess material streams (Np, Pu, and Am/Cm) introduced significant sodium nitrate to the system**
- **Evidence of degraded rheological properties from over-washing and of positive impact of more frit Na with Sludge Batch 2**
  - Precipitated testing to mitigate potential hydrogen generation concerns in the Chemical Process Cell and to ensure glass durability
- **Burden on the Tank Farm with each wash cycle**

Significantly more HM sludge mass discovered

- **Higher than projected Tank 11 solids found for Sludge Batch 4 based on assumptions on the Al compounds**
- **Plans for Al dissolution re-initiated to compensate**
  - Implemented for Sludge Batch 5 and to be implemented for Sludge Batch 6 and future HM sludge tanks

Sludge Batch Qualification Compositions

Data reported as Wt% in Dried Solids

Batch	*SB1a*	*SB1b*	*SB2*	*SB3*	*SB4*	*SB5*
Al	6.36	8.04	5.44	5.12	16.1	8.91
Fe	25.8	22.2	23.9	13.8	7.90	16.3
Hg	0.16	1.3	0.19	0.065	2.5	2.2
Mn	2.61	3.82	3.19	3.98	1.88	3.66
Na	9.40	6.94	6.80	14.1	13.1	15.2
S	0.53	0.412	0.552	1.72	0.539	<0.31
U	3.21	2.62	8.12	5.71	1.75	5.33

Batch	*SB1a*	*SB1b*	*SB2*	*SB3*	*SB4*	*SB5*
Sodium (M)	0.72	0.38	0.50	1.80	1.16	1.14
Nitrite (M)	0.26	0.166	0.164	0.722	0.574	0.22
Nitrate (M)	0.14	0.05	0.075	0.416	0.404	0.13

LWO & DWPF Process Changes

Abandonment of In-Tank Precipitation (ITP) process and adaptation of solvent extraction process for salt treatment

- **DWPF process developed for ITP/coupled operations**
  - ITP stream introduced Na and K with small amounts of B
  - Different frit required than sludge only operations
- **Solvent extraction process required facility and process modifications**
  - Retrofitted existing facility to incorporate flammability controls
  - Current salt streams introduce significant liquid volume and require addition at boiling; greatly increase processing time
  - Salt streams are not added with every batch so frit needs to accommodate both sludge only and coupled operations
  - When SWPF comes on line, TiO_2 concentrations will also be of concern

Interim Salt Processing

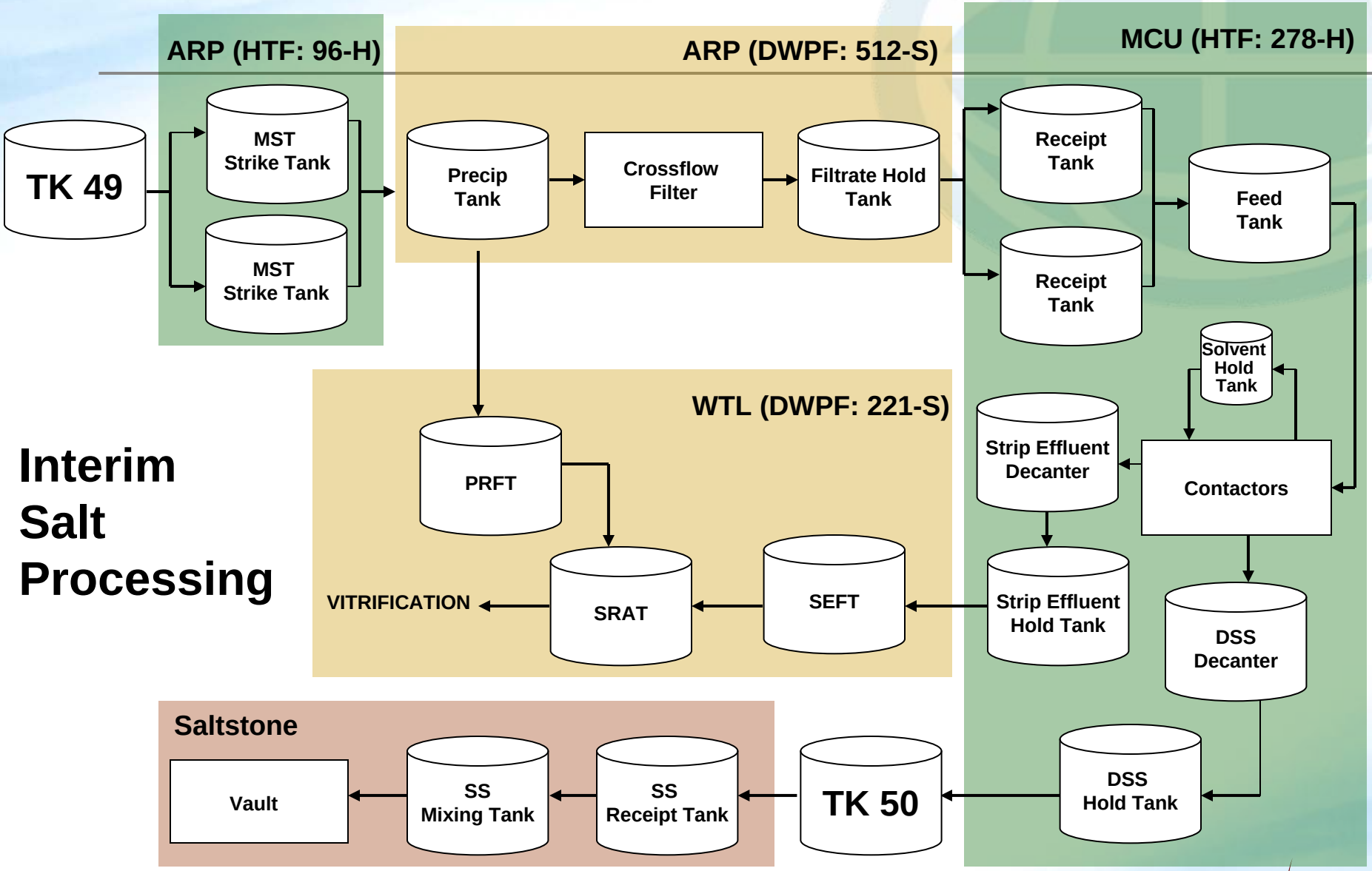

LWO & DWPF Process Changes (continued)

Revised radiolytic hydrogen retention assumptions for slurried tanks

- **Indication of increased levels of hydrogen generation**
- **Implemented mitigation control to limit sludge mass resulting in smaller sludge batches**
  - Minimizes the time allocated for sludge preparation particularly for washing and settling

Selected Tank 40 as the primary feed tank and Tank 51 as the batch preparation tank to accelerate closure

- **Depending on the size of the heel in Tank 40, DWPF feed can be significantly different than the qualified batch**

Leaking slurry pumps in Tank 40 decrease solids content

- **Impact on DWPF attainment due to increased boil time**
- **Requires decant which decreases Na available to the system**

R&D Testing to Improve Processing

Both chemical and physical changes pursued

Improved and enhanced glass production models to widen operating window

- **Reduced durability model uncertainty through refinement of uncertainty in model and incorporation of new glass data**
- **Improved liquidus model to provide more accurate estimates**
- **Increased glass sulfate limit by establishing glass composition dependence**
- **Increased titania limit through consideration of available data from other programs**

Switched from "global" frit strategy to tailored frit for each sludge batch

- **Uses frit composition grid with multiple composition projections**
- **Allows for more easy screening of sludge composition alternatives**

R&D Testing to Improve Processing (continued)

To minimize facility processing issues, initiated qualification strategy changes and fundamental understanding programs

- **Radioactive qualification sample taken earlier and each washing step mimicked to find optimal washing endpoint**
  - Allows identification of potential rheological issues and minimizes the water introduced into the Tank Farm while ensuring highest solids loading for DWPF processing
- **"Processing" studies initiated to provide information on the sludge to be processed in DWPF versus only the qualification composition**
  - Chemical process cell testing enhanced to identify operating windows instead of a single target addition strategy
  - Identifies potential foaming/rheology issues and time for Hg removal
- **Simulant development program initiated to more closely match real sludge properties**

Radioactive Sludge Rheology

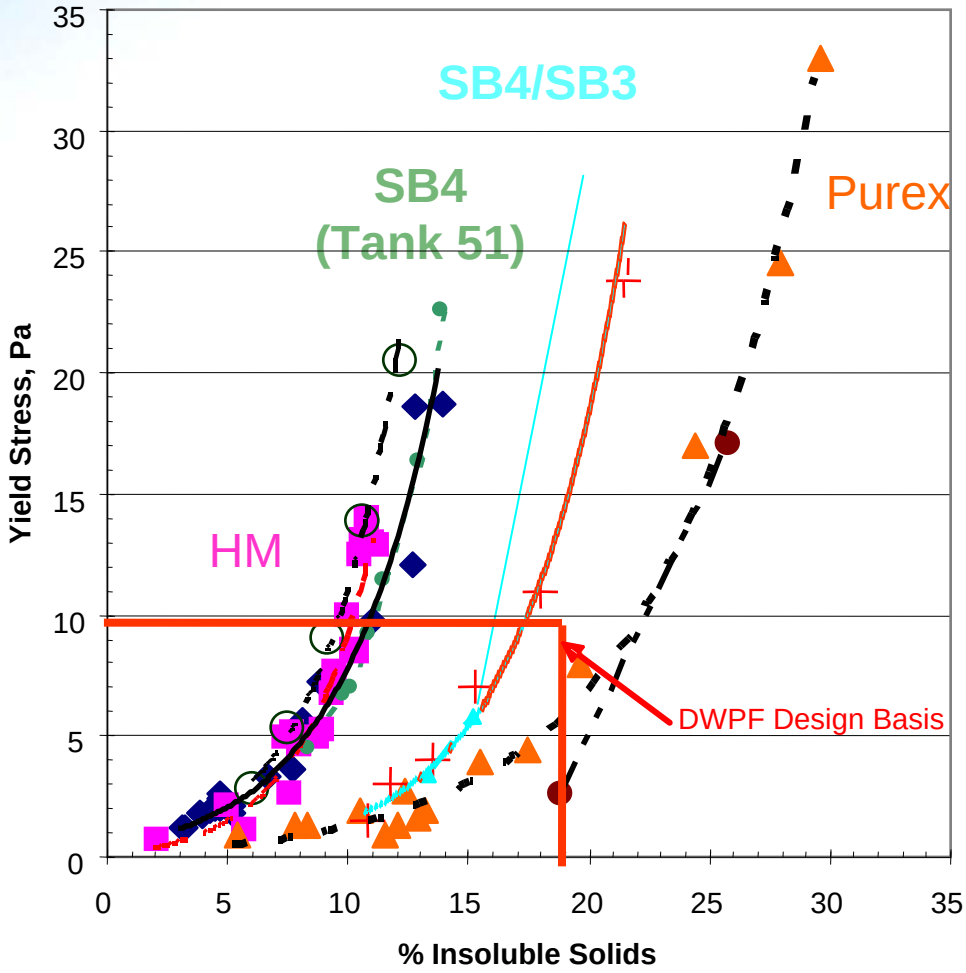

Sample	Yield Stress (Pa)	Total Solids (wt%)	Insol. Solids (wt%)
SB1a	1.4	18	N/A
SB1b	1.1	17	N/A
SB2	12	18.4	15.5
SB3 Qual	4.1	29.9	15.4
SB3 Blend	5.7	22.8	16.0
SB4 Qual	17	19.9	13.0
SB4 Blend	5.6	20.3	15.4
SB5 Qual	6.8	17.1	11.2
SB5 Blend	5.2	16.0	11.0

DWPF Processing Information

Implementation of improvements led to maximizing waste throughput for SB3 and SB4

Batch	*SB1a*	*SB1b*	*SB2*	*SB3*	*SB4*	*SB5*
Acid Stoichiometry	125%	137.5%	125 - 185%	140%	130%	140-145%
Nominal Waste Loading (% of Calcined Solids)	28	28	28/34	38	34	33
Frit	200	200	200/320	418	418/510	418

SB3 – Started processing at 33%, increased to 38%, and processed for ~8 months at 40% before returning to 38%
SB4 – Transitioned to 510 once supply was available

R&D Testing to Improve Processing (continued)

Tools developed to enhance melt rate/throughput

- **Dry and slurry fed melt rate furnaces to understand impact of frit and sludge components**
- **Melt rate models to rank relative melt rates**
  - Plan to use to assist in frit selection

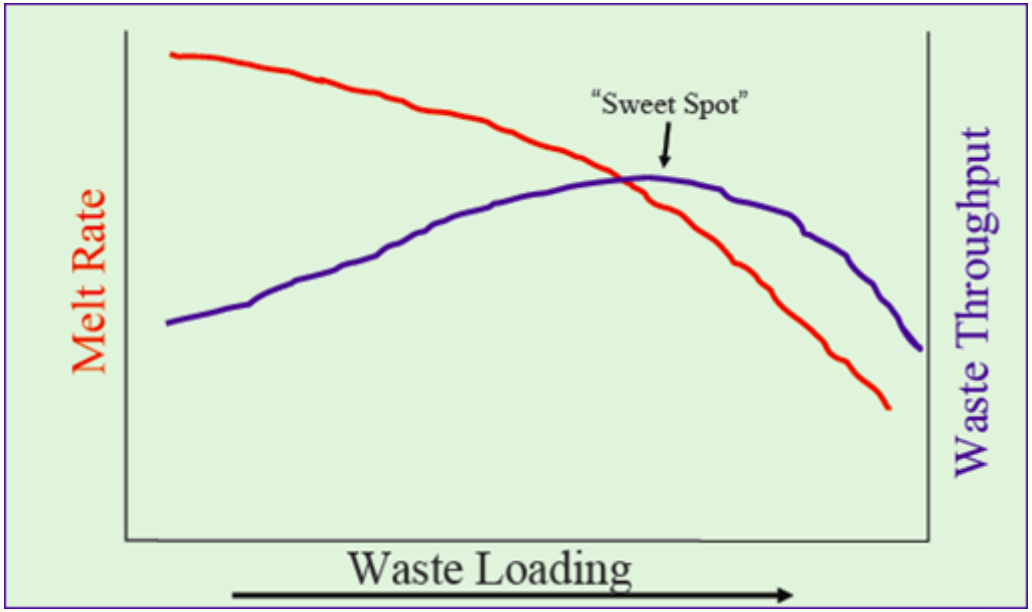

Summary of DWPF Chemical Changes

Criteria	*Before Start-up*	*Current Processing*
Sludge Composition	Tank blending to mitigate compositional extremes	Accommodate extremes to meet tank closure commitments
Salt Process	In-Tank Precipitation	Actinide Process Removal and Solvent Extraction
Al Dissolution	Perform on select tanks to reduce Al in glass	Use to reduce sludge mass
Rheology Controls	Function of total solids for all sludge types	Use yield stress/consistency measurements for each batch
Wash Target	Nominally 0.5 M Na	Optimize for each batch
Batch Size	1 million gallons	0.5 million gallons
Preparation/ Feed Tanks	Prepare and feed from Tanks 40 or 51	Prepare sludge in Tank 51 and feed from Tank 40
Chemical Process Acid Strategy	Add nitric to balance formate in salt stream	Add formic and nitric acids to obtain target melter redox
Frit Composition	202 for Coupled Operations	Tailored to each batch

Physical Changes to the Melter

Melter glass pump to improve mixing

- **6% increase in waste throughput**

Heated bellows liner to minimize pluggage

- **7% improvement in attainment**

Pour spout design change to accommodate insert

Steam to single stage of Primary Offgas SAS

- **HEME replacement outages reduced from every 3 months to three years**

Deployed the throat protector camera to provide operations with alternate pour stream view

Pour spout control valve replaced with digital positioner

Glass Pump Concept

Utilize existing glass lift pump technology to increase convection in glass pool

- **Results in increased melt rate and production improvement**

Similar technology used by West Valley for glass pouring and Duratek for glass agitation

Testing at Clemson University confirmed design concepts

- **Identified potential erosion problem**

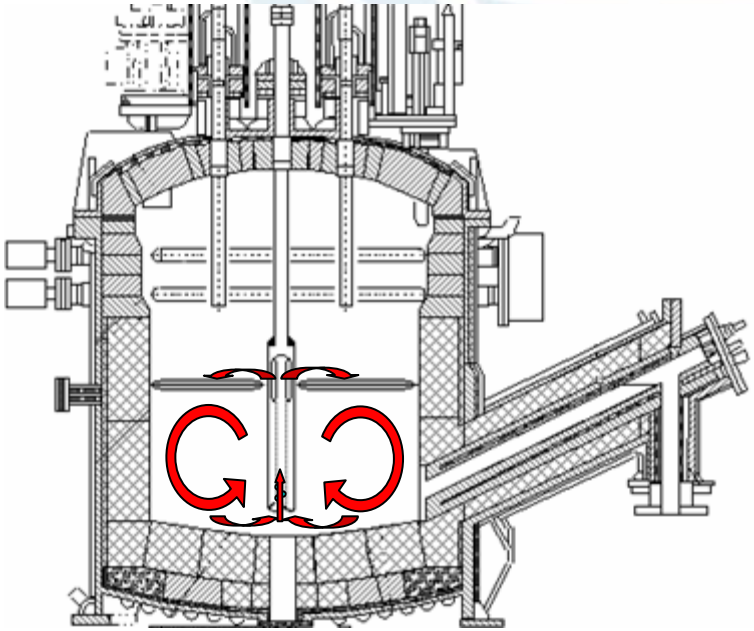

Heated Bellows Liner Concept

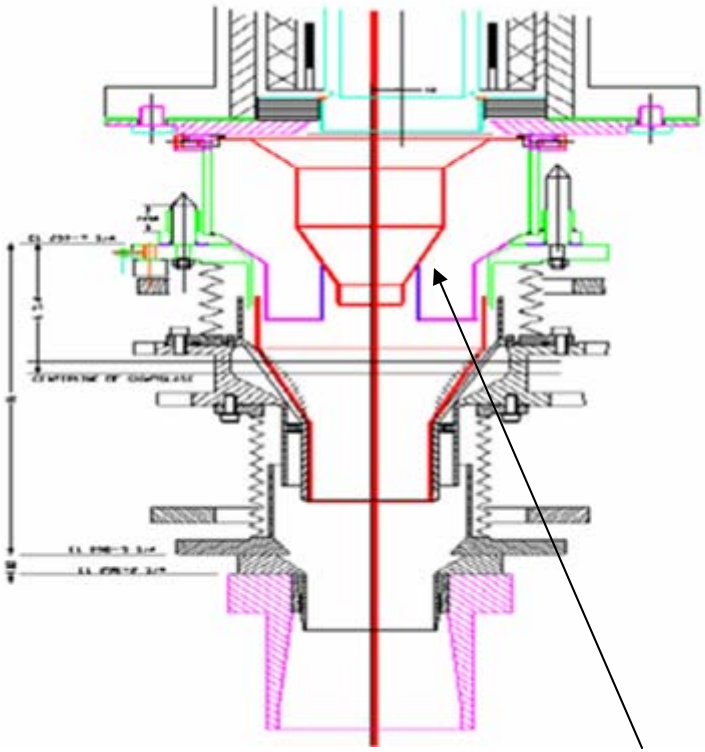

Melter pressure excursions cause unstable pour stream

- **Results in glass accumulation in liner and pour outages**

Replaced existing liner with heated liner to allow glass flow without accumulation

- **Reduces pouring outages**

Melter Comparison

Parameter	Melter # 1	Melter # 2 (To Date)
Years of Operation	8.5 yrs of operation: (5/11/94 to 10/18/02) 6.5 yrs of radioactive operation	6 yrs 2 mo operation (3/03– 5/09) (95% of Melter 1 radioactive operation)
Total Canisters Produced	1339 radioactive 80 non-radioactive	1368 radioactive (103% of Melter 1)
Total Amount of Radioactive Glass	5.2M lbs	5.35 M lbs (103% of Melter 1)
Total Amount of Radioactive Waste	1.5M lbs	1.96M lbs (131% of Melter 1)

HLW Processing Overview

2707 Canisters Produced (thru May 2009)

- **108 Canisters in FY09**

2.82M gallons high level waste transferred from the Tank Farm

Sludge Batch 5 expected to be processed thru May 2010 based on the target Sludge Batch 6 readiness date

Melter Status

- **Melter 2 operational since March 2003**
- **Melter 3 ready as spare**
- **Melter 4 vessel and frame contract awarded**
  - K3 Refractory – Manufacturing In progress
  - Components – Under construction
  - Scheduled assembly completion date – November 2013

Future Issues and Challenges

Canister fissile loading is limiting waste loading

- **897 g total fissile/m^3 of glass**
- **Sludge Batch 5 limited to 33 wt % waste loading**

Time required for Hg stripping constraining processing

- **Expected to continue to be problematic for HM sludges**

Integration of SWPF process with DWPF

New contract goals for LWO

- **Total canister production goals**
  - Need to increase throughput capability of melter
- **Availability of Federal Repository (GWSB #3)**
- **Failed equipment disposal**
- **Aging facility requiring increasing infrastructure maintenance**
- **Wastewater reduction**

Questions???

Connie C. Herman

Savannah River National Laboratory

Aiken, SC 29808

Telephone: (803) 819-8417

E-mail: connie.herman@srnl.doe.gov